# operating and service manual

for satellite communications terminal equipment

MP MASTER
MA24442

varian

Digitized by the Internet Archive
in 2025

https://archive.org/details/manualsplus_05947

# INSTRUCTION MANUAL

## 1-20 WATT
## CW MEDIUM POWER AMPLIFIER

VARIAN ASSOCIATES
MICROWAVE EQUIPMENT OPERATIONS
317 BROKAW ROAD
SANTA CLARA, CALIFORNIA 95050

TABLE OF CONTENTS


| Section | | Page No. |
|---|---|---|
| 1.0 | INTRODUCTION | 1-1 |
| 1.1 | SPECIFICATIONS | 1-3 |
| 2.0 | GENERAL FUNCTIONAL DESCRIPTION | 2-1 |
| 2.1 | FRONT PANEL | 2-1 |
| 2.1.1 | Status Indicator | 2-1 |
| 2.1.2 | Control Switches | 2-4 |
| 2.1.3 | Helix Current or Beam Current Meter | 2-4 |
| 2.1.4 | Gain Adjust | 2-4 |
| 2.1.5 | RF Input | 2-4 |
| 2.1.6 | RF Output | 2-4 |
| 2.2 | REAR PANEL | 2-5 |
| 2.2.1 | Air Intake Exhaust | 2-5 |
| 2.2.2 | Prime Power | 2-5 |
| 2.2.3 | Fuse Protection | 2-5 |
| 2.2.4 | Remote Interface (Optional) | 2-5 |
| 2.3 | POWER SUPPLY | 2-5 |
| 2.3.1 | Logic | 2-8 |
| 2.3.2 | Power Supply | 2-8 |
| 2.4 | RF SECTION | 2-10 |
| 3.0 | UNPACKING AND INSTALLATION | 3-1 |
| 3.1 | UNPACKING AND INSPECTION | 3-1 |
| 3.1.1 | Pre-Inspection | 3-1 |
| 3.1.2 | Unpacking | 3-1 |
| 3.1.3 | Check Packing Slips | 3-1 |
| 3.1.4 | Post Unpacking Inspection | 3-1 |
| 3.1.5 | Pre-Installation Electrical Inspection | 3-2 |

| Section | | | Page No. |
|---|---|---|---|
| 3.2 | MECHANICAL INSPECTION | | 3-2 |
| | 3.2.1 | Rack Installation | 3-2 |
| | 3.2.2 | Waveguide Connection | 3-3 |
| | 3.2.3 | Coaxial Connections | 3-4 |
| | 3.2.4 | Air Ducting | 3-4 |
| 3.3 | ELECTRICAL INTERCONNECTION | | 3-4 |
| | 3.3.1 | AC Prime Power | 3-5 |
| | 3.3.2 | Grounding | 3-5 |
| | 3.3.3 | External Connections | 3-5 |
| 3.4 | REPACKAGING FOR SHIPMENT | | 3-5 |
| | 3.4.1 | Shipping Container | 3-7 |
| | 3.4.2 | Sealing Container | 3-7 |
| | 3.4.3 | Marking | 3-7 |
| 4.0 | OPERATION | | 4-1 |
| 4.1 | OPERATING MODES | | 4-1 |
| | 4.1.1 | FTD - Filament Time Delay | 4-1 |
| | 4.1.2 | STDBY - Standby | 4-2 |
| | 4.1.3 | HV ON - High Voltage On | 4-2 |
| | 4.1.4 | Fault | 4-2 |
| 4.2 | METERS CONTROLS AND INDICATORS | | 4-4 |
| 4.3 | INITIAL TURN-ON | | 4-4 |
| | 4.3.1 | Pre-Power Check | 4-4 |
| | 4.3.2 | Turn-On Sequence | 4-5 |
| 4.4 | NORMAL TURN ON | | 4-6 |
| 4.5 | TURN-OFF | | 4-6 |

| Section | | | Page No. |
|---|---|---|---|
| 5.0 | THEORY OF OPERATION | | 5-1 |
| 5.1 | FUNCTIONAL BLOCK DESCRIPTION | | 5-1 |
| | 5.1.1 | RF Section | 5-2 |
| | 5.1.2 | Power Supply Section | 5-2 |
| 5.2 | POWER SUPPLY DETAILED DESCRIPTION | | 5-7 |
| | 5.2.1 | Switch Regulator Assembly | 5-7 |
| | 5.2.2 | HV Converter | 5-9 |
| | 5.2.3 | HV Module | 5-10 |
| | 5.2.4 | Oscillator Bias | 5-12 |
| | 5.2.5 | Control Logic | 5-13 |
| | 5.2.6 | Control and Indicator (LED PCB) | 5-14 |
| | 5.2.7 | Mother/Timer | 5-14 |
| | 5.2.8 | Grid/Anode PCB | 5-15 |
| 6.0 | MAINTENANCE | | 6-1 |
| 6.1 | TEST EQUIPMENT REQUIRED | | 6-2 |
| 6.2 | PREVENTIVE MAINTENANCE | | 6-2 |
| | 6.2.1 | Visual Inspection | 6-2 |
| | 6.2.2 | Routine Cleaning | 6-5 |
| | 6.2.3 | Lubrication | 6-5 |
| | 6.2.4 | Paint Touch Up | 6-5 |
| 6.3 | PERFORMANCE CHECK | | 6-7 |
| 6.4 | ADJUSTMENTS AND CALIBRATION | | 6-9 |
| | 6.4.1 | Adjustment Locations | 6-9 |
| | 6.4.2 | Parts Replacement | 6-12 |
| | | 6.4.2.1 TWT Replacement | 6-12 |
| | | 6.4.2.2 Module and Component Replacement | 6-12 |
| 6.5 | TROUBLESHOOTING | | 6-13 |

| Section | | Page No. |
|---|---|---|
| 6.6 | VOLTAGE MEASUREMENT | 6-17 |
| 7.0 | DRAWINGS AND SCHEMATICS | 7-1 |
| 8.0 | SPECIAL FEATURES | 8-1 |

LIST OF ILLUSTRATIONS


| Figure No. | | Page No. |
|---|---|---|
| 2-1 | Front Panel View | 2-2 |
| 2-2 | Rear View of TWTA | 2-6 |
| 2-3 | TWTA Cover Removed | 2-8 |
| 2-4 | Power Supply Deck Family Tree | 2-9 |
| 3-1 | Prime Power Connection | 3-6 |
| 4-1 | TWTA Front Panel | 4-4 |
| 5-2 | RF Components | 5-3 |
| 5-3 | Power Supply Block Diagram | 5-4 |
| 5-4 | TWTA Terminal Block | 5-6 |
| 5-5 | Power Supply Modules | 5-8 |
| 5-6 | Four TWT Grid/Anode Configuration | 5-17 |
| 6-1 | Microwave Measurements Circuit | 6-8 |
| 6-2 | TWTA and Power Supply Adjustments | 6-11 |
| 6-3 | Power Supply Interconnection | 6-18 |

# WARNING

Lethal power line voltages are present when power is applied to the system. Be extremely careful when working inside the unit. Use only one hand to make any measurements or adjustments. If possible, turn power off before making adjustments. Do not attempt to repair or troubleshoot this unit unless you are thoroughly familiar with its operation and are experienced in servicing high voltage equipment.

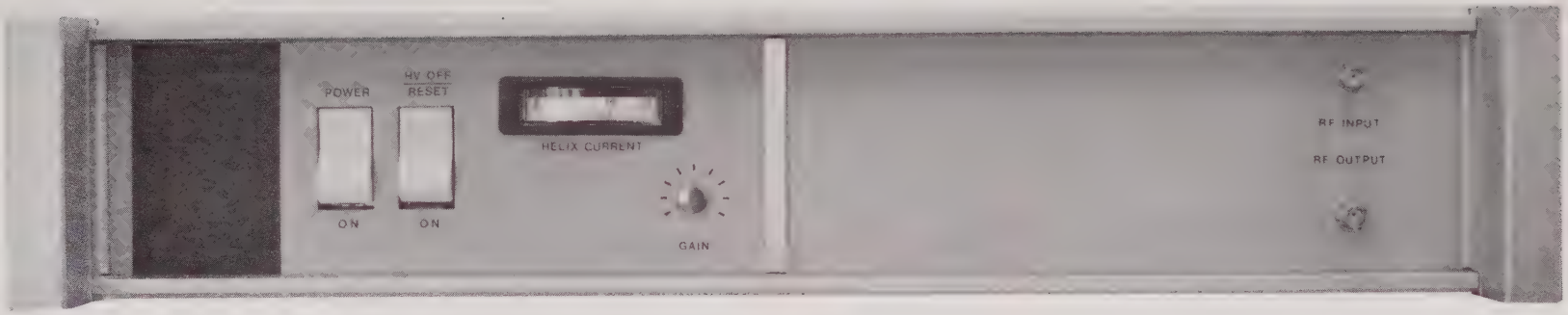
POWER
HV OFF
RESET
ON
ON
HELIX CURRENT
GAIN
RF INPUT
RF OUTPUT

## 1.0 INTRODUCTION

The Varian medium power amplifier is a completely self-contained unit consisting of a 1 to 20 watt TWT, plus all necessary power supplies, RF components and control logic circuitry required to meet specified performance. The following Table 1-1 lists all the available tube types. The units are packaged in a single assembly designed for bench top or slide mounting in a standard 19-inch rack cabinet. The drawer height is three and one-half inches. Forced air cooling for each unit is provided.

The Varian medium power standard amplifier consists of 115/230 VAC 50-60 Hz prime power, a 1 to 20 watt TWT, RF in/out through connectors located on the right front panel and a Grid/Anode PCB.

Any of the following special features are available with the standard amplifier.

- Automatic fault recycle
- Optimized power and gain over non-standard frequency ranges.
- Remote control capability.
- Non-standard RF connector types and rear panel location.
- 115/230 VAC single phase operation at any line frequency from 47-420 Hz.
- $\pm$ 48 VDC prime power operation.
- Remote TWT location with mating connector.
- Serrodyne operation for many of the models listed on Table 1-1.
- More stringent environmental performance.
- Chassis slides.
- Elapsed time meter, front.
- Special internal RF components such as 30 dB sample port, input RF attenuator, equalizers, isolators, harmonic filters and waveguide output.

TABLE 1-1

1-20 WATT CW TWTA STANDARD PRODUCT INDEX

| TWT Output Power (W) | Frequency (GHz) | Gain** (dB) | Connector Type | Noise Figure | Tube Type | TWTA Model No. |
|---|---|---|---|---|---|---|
| 1* | 1.0 - 4.0 | 30 | N | 30 | VTG-6020A1 | VZG-6949G1 |
| 1 | 4.0 -12.4 | 30 | N | 30 | VTR-6070A2 | VZH-6979G1 |
| 1 | 8.0 -18.0 | 30 | SMA | 30 | VTM-6094A2 | VZM-6999G1 |
| 2 | 1.0 - 2.0 | 35 | N | 30 | VTL-6040H1 | VZL-6948G1 |
| 2 | 2.0 - 4.0 | 30 | N | 30 | VTS-6050A2 | VZS-6958G1 |
| 2 | 2.6 - 5.2 | 30 | N | 30 | VTG-6025A2 | VZG-6958G2 |
| 2 | 4.0 - 8.0 | 30 | N | 30 | VTC-6060A1 | VZC-6968G1 |
| 2 | 4.0 - 8.0 | 60 | N | 30 | VTC-6060H1 | VZC-6968G2 |
| 2 | 5.4 -11.0 | 30 | SMA | 30 | VTH-6074B1 | VZH-6978G1 |
| 2 | 5.4 -11.0 | 60 | SMA | 30 | VTH-6074J1 | VZH-6978G2 |
| 2 | 8.0 -12.4 | 30 | SMA | 30 | VTX-6084E1 | VZX-6988G1 |
| 2 | 8.0 -12.4 | 60 | SMA | 30 | VTX-6084H3 | VZX-6988G2 |
| 2 | 12.4 -18.0 | 30 | SMA | 30 | VTU-6090A1 | VZU-6998G1 |
| 2 | 12.4 -18.0 | 60 | SMA | 30 | VTU-6090H1 | VZU-6998G2 |
| 2 | 8.0 -16.0 | 30 | SMA | 30 | VTM-6094A1 | VZM-6989G1 |
| 5 | 2.0 - 4.0 | 50 | N | 30 | VTS-6050H5 | VZS-6958G3 |
| 10 | 2.0 - 4.0 | 35 | N | 30 | VTS-6055A1 | VZS-6950G1 |
| 10 | 4.0 - 8.0 | 40 | N | 30 | VTC-6069A1 | VZC-6960G1 |
| 10 | 4.0 -10.0 | 35 | N | 30 | VTH-6079H1 | VZH-6970G1 |
| 10 | 7.0 -11.0 | 45 | N | 30 | VTX-6089H2 | VZX-6980G1 |
| 10 | 8.0 -12.4 | 40 | N | 30 | VTX-6089H3 | VZX-6980G2 |
| 10 | 12.4 -18.0 | 30 | WG*** | 35 | VTU-6091A1 | VZU-6990G1 |
| 10 | 12.4 -18.0 | 45 | WG*** | 35 | VTU-6091H1 | VZU-6990G2 |
| 10 | 8.0 -16.0 | 30 | SMA | 35 | VTM-6194B1 | VZM-6990G3 |
| 10 | 8.0 -18.0 | 45 | SMA | 35 | VTM-6194H1 | VZM-6990G4 |
| 20 | 1.0 - 2.0 | 35 | N | 35 | VTL-6140B1 | VZL-6941G1 |
| 20 | 2.0 - 4.0 | 35 | N | 35 | VTS-6150B1 | VZS-6951G1 |
| 20 | 2.0 - 4.0 | 54 | N | 35 | VTS-6150J1 | VZS-6951G2 |
| 20 | 4.0 - 8.0 | 35 | N | 35 | VTC-6160B1 | VZC-6961G1 |
| 20 | 4.0 - 8.0 | 54 | N | 35 | VTC-6160J1 | VZC-6961G2 |
| 20 | 6.0 -11.0 | 35 | N | 35 | VTH-6170B1 | VZH-6971G1 |
| 20 | 6.0 -11.0 | 54 | N | 35 | VTH-6170J1 | VZH-6971G2 |
| 20 | 8.0 -12.4 | 35 | N | 35 | VTX-6180B1 | VZX-6981G1 |
| 20 | 8.0 -12.4 | 54 | N | 35 | VTX-6180J1 | VZX-6981G2 |
| 20 | 12.4 -18.0 | 30 | WG*** | 35 | VTU-6191A1 | VZU-6991G1 |
| 20 | 12.4 -18.0 | 45 | WG*** | 35 | VTU-6191H1 | VZU-6991G2 |
| 20 | 8.0 -18.0 | 45 | SMA | 35 | VTM-6192H1 | VZM-6991G3 |
| 20 | 8.0 -18.0 | 40 | SMA | 35 | VTM-6196A1 | VZM-6991G3A |

* 1.0 - 1.5 GHz Output Power is 0.5 W

** Gain for 1 - 2 - 5W TWTs is small signal; for 10 and 20W TWTs, it is gain at rated power.

*** Mates with UG-419/U Flange.

NOTE: This list subject to change without notice.

If your amplifier was ordered with one or more of the above options, refer to the Special Features Section (Section 8) for description.

The TWTA is constructed using modular blocks wherever possible. The power supply consists of plug-in printed circuit boards that can be removed for fast and easy service. The modular approach yields a very serviceable unit.

## 1.1 SPECIFICATIONS

The unit is designed to meet the specifications defined in Tables 1-2 and 1-3.

TABLE 1-2

ELECTRICAL SPECIFICATIONS OF MEDIUM POWER TWTAs

| Parameter | Value |
|---|---|
| Power Levels | 1,2,10,20 watts CW standard |
| Frequencies | 1 - 18 GHz |
| Gain | 30 - 60 dB |
| Input/Output Impedance | 50 ohms nominal TWT impedance or waveguide. |
| Noise Figure | 30 dB max. of all 1, 2 and most 10 watt CW TWTAs; 35 dB max. for 20 watt CW and above TWTAs. See Table 1-1. |
| Power Output Stability | Long term 0.25 dB/24 hours at constant drive and constant temperature. |
| Spurious, AM and PM Noise Levels | Total spurious output typically -50 dBc, excluding harmonics and residual modulation. The low noise transformer and switching regulator design eliminates high frequency spurious components associated with SCR switching designs. |
| Prime Power | 115/230 volts $\pm$ 10%, 50/60 Hz, single phase. Optionally, $\pm$ 48 VDC. |

TABLE 1-3

MECHANICAL/ENVIRONMENTAL SPECIFICATIONS

| Parameter | Value |
|---|---|
| Size (H x D x W) | Height 3-½ in. (8.9 cm) x Length 21 in. (53.3 cm) x Width 19 in. (48 cm). |
| Weight | 45 lbs. max. (32.1 Kg) |
| Cooling | Integral forced air, rear panel intake and exhaust. |
| Temperature Range | 0 - +50$^{o}$ standard operation. All metal ceramic tubes rated for high reliability in military environments typically -54$^{o}$C to +110$^{o}$C. |

SECTION 2

## 2.0 GENERAL FUNCTIONAL DESCRIPTION

The amplifier is designed for simple and reliable operation. It is self-protecting against damage from most internal and external fault conditions. The full specified frequency band is covered without need for tuning or operator adjustment. Once placed into operation, the system will recycle back into operation automatically after prime power interruption in as short a time as possible consistent with TWT warm-up requirements.

The power amplifier is contained in a single 19-inch drawer assembly designed for slide mounting in a standard 19-inch rack cabinet. The amplifier occupies just three and one-half inches of cabinet neight and twenty inches of depth. The TWTA is functionally divided into four sections. The sections are: front panel, rear panel, power supply and RF sections.

## 2.1 FRONT PANEL

The front panel of the power amplifier is the primary operator interface with the TWTA. The front panel provides the necessary controls and indicators to permit control and monitoring of the TWTA. Refer to Figure 2-1 for a photo of the front panel.

### 2.1.1 STATUS INDICATOR

The status indicator is located on the left side of the TWTA. The status indications provided are: power on, filament time delay, standby, high voltage on and summary fault.

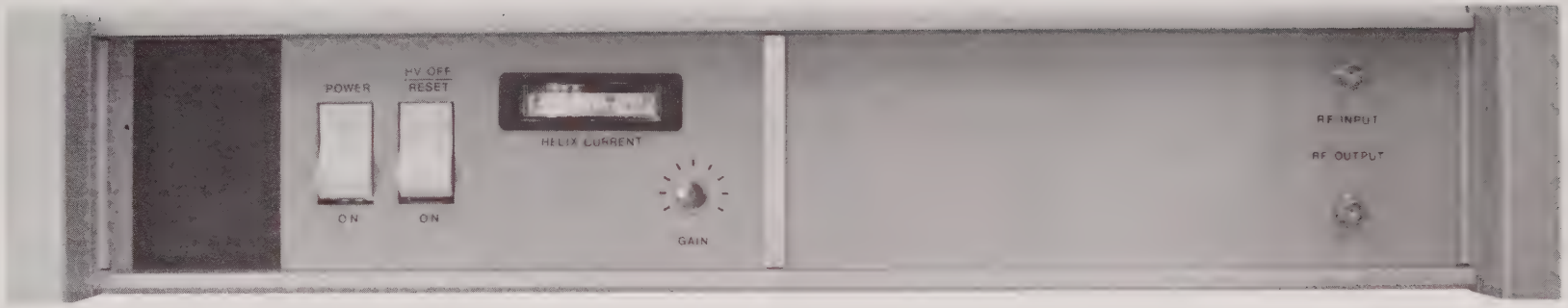


FIGURE 2-1

FRONT PANEL VIEW

a. POWER ON. When the power on/off control of the TWTA is turned to the "ON" position, the logo will light red to indicate this condition.

b. F.T.D.

The FTD indicator is lit when the TWTA is initially turned on or after a short prime power failure. The indication advises that the TWT filaments are in the process of heating. The heating time is three minutes maximum. The filament time delay circuitry is proportional consistent with tube requirements. Thus in the event of a power failure, the length of time delay will be proportional to the length of the power failure.

c. STDBY

The standby condition indicates that the filament time delay is complete, no TWTA faults are registered and the high voltage can be turned on. It is also an indication that the delay is over, no faults exist and the H.V. is off.

d. H.V. ON

The high voltage on indicator registers when the H.V. ON button is depressed, requesting an "on" condition. The H.V. ON indicator lights when the helix and collector voltages are applied to the TWT.

e. FAULT

The fault indicator registers any time a major fault occurs. The faults monitored in the TWTAs are: helix overcurrent, overtemperature and internal interlock. Any one of the above faults will cause the high voltage to turn off. This indicator is latching and will stay latched until reset.

### 2.1.2 CONTROL SWITCHES

Two control switches are provided on the TWTA. They are the power on/off and the HV on/off/reset.

The power on/off switch controls the prime power application to the internal circuitry. The HV on/off/reset switch turns the high voltage on or off and reset. This switch in the off position turns the high voltage off and resets the latching faults. The fault indicator is also reset.

### 2.1.3 HELIX CURRENT OR BEAM CURRENT METER

The Helix current meter is used for all 10 and 20 W models and provides an analog indication of the TWT helix current. The meter is calibrated in milliamperes full scale. For 1 and 2 watt models a Beam current meter is used. This provides an analog indication of the helix and collector current sum in milliamperes.

### 2.1.4 GAIN ADJUST

The gain control provides a nominal 6 dB gain variation in the TWT.

### 2.1.5 RF INPUT

The RF signal to be amplified by the TWTA is applied through a coaxial or waveguide connector, depending on model. The RF input can be located on the rear panel instead of the front panel without changing its function. Refer to Table 1-1 or special features section for connector type.

### 2.1.6 RF OUTPUT

The amplifier output is directed through coaxial or waveguide connections depending on model. See Table 1-1 or special features section for correct type.

## 2.2 REAR PANEL

The rear panel of the TWTA contains various interface points that are required during initial installation or service. Refer to Figure 2-2 for a photo of the rear panel.

### 2.2.1 AIR INTAKE/EXHAUST

Forced air for cooling of the TWTA is provided by an internal fan. Referring to Figure 2-2, the cooler air enters the TWTA on the right side and exhausts as hotter air on the left side.

### 2.2.2 PRIME POWER

The prime power input is applied to the TWTA at TB1 on the rear panel. Optional prime power input is 48 VDC $\pm$ 10%, 48 VDC return and an earth ground. Normal prime power input is 120/240 VAC 50-60 Hz.

### 2.2.3 FUSE PROTECTION

Two prime power line fuses are provided in the TWTA. One fuse is in the primary line and the other is in the return line. The fuses are field replaceable and are mounted in removeable cartridges.

### 2.2.4 REMOTE INTERFACE (OPTIONAL)

This option may be purchased and installed at any time. A remote interface connector and switch is provided. This permits remote control and status monitoring of the TWTA. Refer to Special Features section to see if this option is included in your amplifier.

## 2.3 POWER SUPPLY

The inner part of the TWTA is divided, as shown in Figure 2-3, into two main sections. The power supply section is shown on the left and

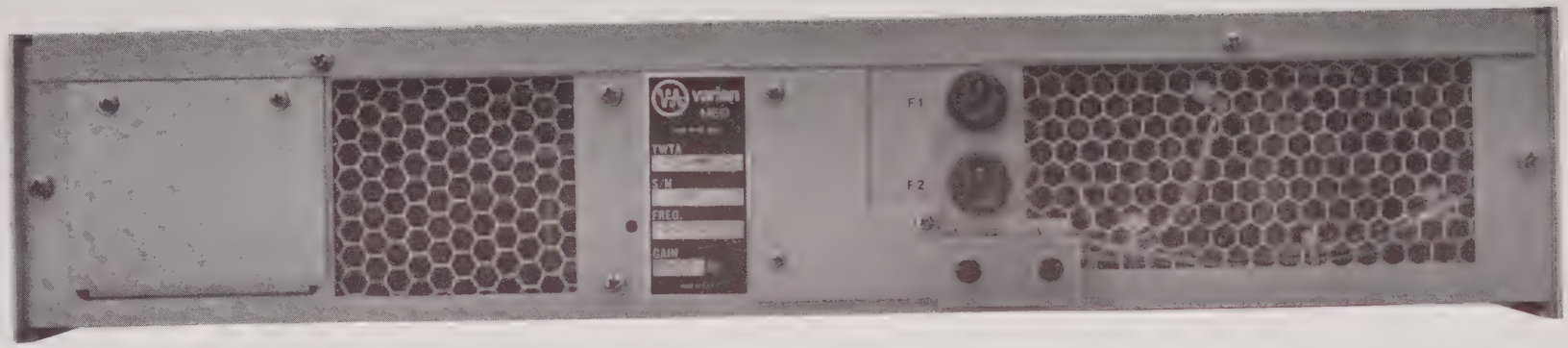


FIGURE 2-2
REAR PANEL VIEW

the RF section is shown on the right. The power supply provides the necessary sequential commands, interfaces and provides the TWT operating voltages. Refer to Figure 2-4 Power Supply Family Tree for a description of how the various blocks fit together.

### 2.3.1 LOGIC

Logic circuitry is provided that interacts with remote interface option and the control switches and indicators on the front panel. The circuits also monitor fault status, provide for proportional time delay, and control the application of collector and helix voltage.

### 2.3.2 POWER SUPPLY

The power supply itself consists of an oscillator bias supply, a switching regulator and a high voltage module.

The oscillator bias supply provides the driving signals to the switch regulator and the high voltage module. The oscillator bias supply also provides the logic and fan operating voltages. The power supply components are all mounted on easy to replace plug-in printed circuit boards. This facilitates fast and easy fault isolation and repair. The fault isolation procedures, therefore, are only required down to the subassembly level.

The switching regulator regulates the 48 VDC input line and yields a stable voltage source for the high voltage module. The switching regulator is the primary line/load regulating element in the power supply.

The high voltage module transfers the regulated DC voltage from the switching regulator to the various operating voltages required by the TWT. The TWT receives filament voltage, collector voltage and helix voltage from the HV module.

FIGURE 2-3
TWTA COVER REMOVED

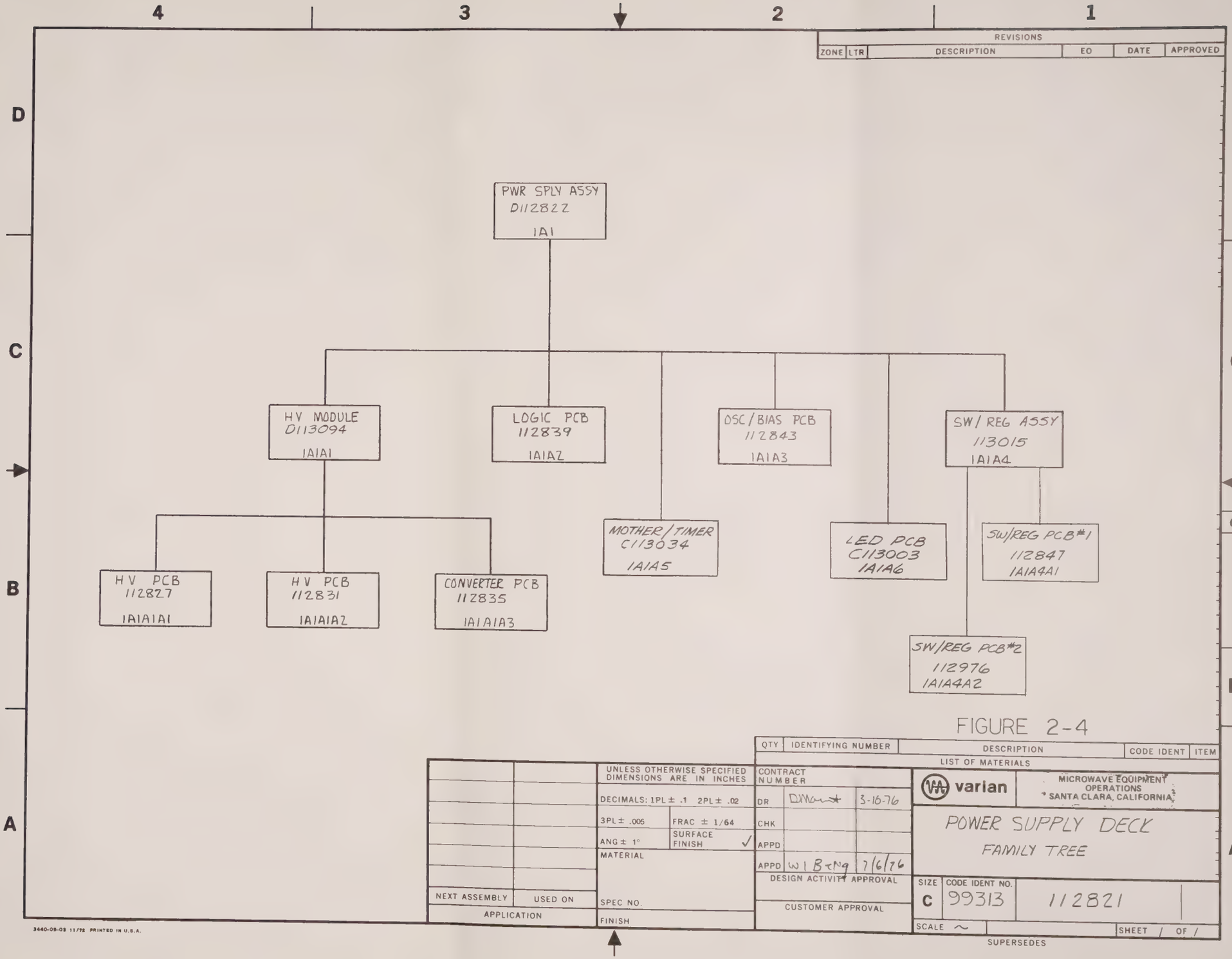
REVISIONS
ZONE LTR DESCRIPTION EO DATE APPROVED
PWR SPLY ASSY D112822 1A1
HV MODULE D113094 1A1A1
LOGIC PCB 112839 1A1A2
OSC/BIAS PCB 112843 1A1A3
SW/REG ASSY 113015 1A1A4
MOTHER/TIMER C113034 1A1A5
LED PCB C113003 1A1A6
SW/REG PCB#1 112847 1A1A4A1
HV PCB 112827 1A1A1A1
HV PCB 112831 1A1A1A2
CONVERTER PCB 112835 1A1A1A3
SW/REG PCB#2 112976 1A1A4A2
QTY IDENTIFYING NUMBER DESCRIPTION CODE IDENT ITEM
LIST OF MATERIALS
UNLESS OTHERWISE SPECIFIED DIMENSIONS ARE IN INCHES
DECIMALS: 1PL ± .1 2PL ± .02
3PL ± .005 FRAC ± 1/64
ANG ± 1° SURFACE FINISH ✓
MATERIAL
SPEC NO.
FINISH
NEXT ASSEMBLY USED ON
APPLICATION
CONTRACT NUMBER
DR DMart 3-16-76
CHK
APPD
APPD W I BeNg 7/6/76
DESIGN ACTIVITY APPROVAL
CUSTOMER APPROVAL
varian
MICROWAVE EQUIPMENT OPERATIONS SANTA CLARA, CALIFORNIA
POWER SUPPLY DECK
FAMILY TREE
SIZE C CODE IDENT NO. 99313 112821
SCALE ~ SHEET 1 OF 1
SUPERSEDES
3440-09-03 11/72 PRINTED IN U.S.A.

FIGURE 2-4

WARNING

LETHAL VOLTAGES UP TO 6 KV ARE PRESENT WHEN POWER IS APPLIED TO THE SYSTEM. BE EXTREMELY CAREFUL WHEN WORKING INSIDE THE UNIT. USE ONLY ONE HAND TO MAKE MEASUREMENTS OR ADJUSTMENTS. IF POSSIBLE, TURN POWER OFF BEFORE MAKING ADJUSTMENTS. DO NOT ATTEMPT TO REPAIR OR TROUBLE-SHOOT THIS UNIT UNLESS YOU HAVE HAD EXPERIENCE IN SERVICING BOTH MICRO-WAVE AND HIGH VOLTAGE SYSTEMS.

## 2.4 RF SECTION

The RF Section contains the TWT and the associated input/output cables. Special RF components, when purchased, are located in this area.

The TWT type is listed in Table 1-1. The TWT is cooled using the same fan that cools the TWTA power supply. The TWT can be removed and replaced by an experienced technician in less than 1/2 hour.

A Grid/Anode PCB is also located in this section adjacent to the fan. It is used to supply a bias voltage to the TWT grid or control voltage to a TWT anode depending on tube type.

SECTION 3

# 3.0 UNPACKING AND INSTALLATION

## 3.1 UNPACKING AND INSPECTION

### 3.1.1 PRE-INSPECTION

Prior to unpacking, inspect the exterior of the packing containers for evidence of damage in shipment. If damage seems evident, immediately contact the carrier that delivered the unit and submit a damage report. Failure to do so could invalidate future claims.

### 3.1.2 UNPACKING

Carefully unpack and remove all items. Save all packing material until all inspections are complete. It is recommended that all packing material be saved for potential future use.

### 3.1.3 CHECK PACKING SLIPS

Verify that all items listed on the packing slips have been received.

### 3.1.4 POST UNPACKING INSPECTION

Inspect all items for evidence of damage in shipment. If damage seems evident, immediately contact the carrier that delivered the equipment and file a claim. Failure to do so could invalidate future claims.

Check the unit thoroughly for damaged or loose parts. To remove the top cover of the RF unit, unscrew the screws around the rear of the cover and lift the cover off. After visual inspection is complete, reinstall the cover and tighten all screws.

### 3.1.5 PRE-INSTALLATION ELECTRICAL INSPECTION

A preliminary electrical inspection can be performed at this time. However, due to the complexity of interconnection, it is advised that electrical inspection be performed after installation of the equipment in its final rack assembly. If it is desired to conduct an electrical inspection prior to installation in the final rack assembly, refer to Sections below for procedures and verifications. The following basic steps must be completed.

a. Verify a proper termination on the input and output of the TWTA.
b. Verify proper AC prime power connections to the TWTA.
c. Follow the initial turn-on procedures as detailed in subsequent sections.

## 3.2 MECHANICAL INSTALLATION

The following procedures should be followed for installation of the TWTA into the final rack assembly.

### 3.2.1 RACK INSTALLATION (OPTIONAL)

The TWTA is designed for bench top or rack slide mounting (optional) in a standard 19-inch wide rack cabinet. The following procedures should be followed:

a. Locate the desired front panel arrangement and exact panel locations for the TWTA on the rack cabinet.
b. Mount the mating slides (supplied) to the rack cabinet. Refer to the outline drawings on the TWTA included in Section 7 of this manual, for exact dimensioning of the rack slide center lines with relation to the unit front panel.

c. Remove feet and bail assembly, install the TWTA on the front panel to the rack cabinet rails.

d. Once the unit is installed on the slides and fastened to the cabinet, the balance of the installation procedures can be completed.

### 3.2.2 WAVEGUIDE CONNECTION

This section applies only for those models with waveguide fittings. Refer to the outline drawing of the TWTA located in Section 7 of this manual for exact dimensioning of the waveguide flange. Interconnecting waveguide flange must be UG419/U. Proceed as follows:

a. Adjust the interconnecting waveguide so that the interconnecting waveguide aligns precisely with the waveguide flange at the rear of the TWTA.

b. If alignment is not precise, or if the installation is subject to motion or vibration, a flexible waveguide section should be installed between the output of the TWTA and the interconnecting waveguide.

c. After alignment is verified in all three planes, install #6-32 nuts to the protruding studs.

d. Tighten all nuts so that the connection is firm, tightening nuts across the waveguide flanges rather than in order around the perimeter of the flange. Do not overtighten.

e. If a pressure tight connection is desired, insert a pressure gasket between the output flange of the TWTA and the interconnecting waveguide.

f. If it is desired to pressurize the interconnecting waveguide, it is suggested that a pressure window be installed at the output of the TWTA.

### 3.2.3 COAXIAL CONNECTIONS

This applies to most models. Carefully align interconnecting cables so as to minimize sidewise stress on the fittings. Screw on connections taking care not to overtighten. This could damage connector interfaces or threads.

**CAUTION**

OPERATING THE TWTA WITH UNTERMINATED OR EXCESSIVE LOAD VSWR COULD CAUSE DESTRUCTION OF THE TWT AND WILL VOID THE WARRANTY. THE MAXIMUM LOAD VSWR SHOULD NOT EXCEED 1.5:1.

### 3.2.4 AIR DUCTING

The TWTA is forced air cooled. The exhaust air from the TWTA may be at a relatively high temperature and heat dissipation may be as high as 400W. In order to prevent heat buildup, when mounted in a rack cabinet, it is advisable that the exhaust air be ducted away from the TWTA to the exterior of the rack cabinet. If exhaust ducting is not used, a minimum of eight inches of free space should be left at the rear of the TWTA exhaust port. Suitable cabinet louvers or ventilation must be provided. If exhaust ducting is to be provided, the external ducting must have a cross sectional area at least equal to that of the exhaust opening. Exhaust duct bends and transitions must be smooth and bend radii should be as large as possible. In most cabinet installation it is suggested that an exhaust fan be located at the top of the equipment rack.

## 3.3 ELECTRICAL INTERCONNECTION

Electrical interconnections to the system consist of prime power, ground connections and external connections.

### 3.3.1 AC PRIME POWER

Prime power requirement for the subsystem is nominal 115/230 VAC, 50-60 Hz. Prime power must be single phase, 3 wire, with the third wire earth ground. Wire used for applying prime power to the system should be sized for the appropriate current, as determined by the prime power voltage, for a nominal 500 Va power consumption. Power is applied to barrier terminal strip TB1 located on the rear panel of the TWTA. The terminal strip is designed for terminal lugs using #6 screw terminals. Prime power is applied to terminals 1 and 2 of the TB and the earth ground wire is supplied to terminal 3 of TB, Figure 3-1 illustrates the AC prime power connection.

### 3.3.2 GROUNDING

It is necessary for personnel and equipment safety to securely ground the amplifier to the station ground bus or to earth ground. The ground connection is located on the rear of the TWTA. This should be securely installed on the ground connection of the TWTA assembly, and tied to a ground bus tie point in the rack cabinet assembly.

### 3.3.3 EXTERNAL CONNECTIONS

If the external interface option is included in the TWTA, refer to Section 5 of this manual for instruction on this.

## 3.4 REPACKAGING FOR SHIPMENT

The instructions given below are intended as a general guide for repackaging the TWT amplifier system for shipment. A detailed discussion on returning goods can be found on the back of the warranty sheet at the rear of this manual. If you have any questions, contact the Varian field office in your area for assistance.

REAR PANEL OF TWTA

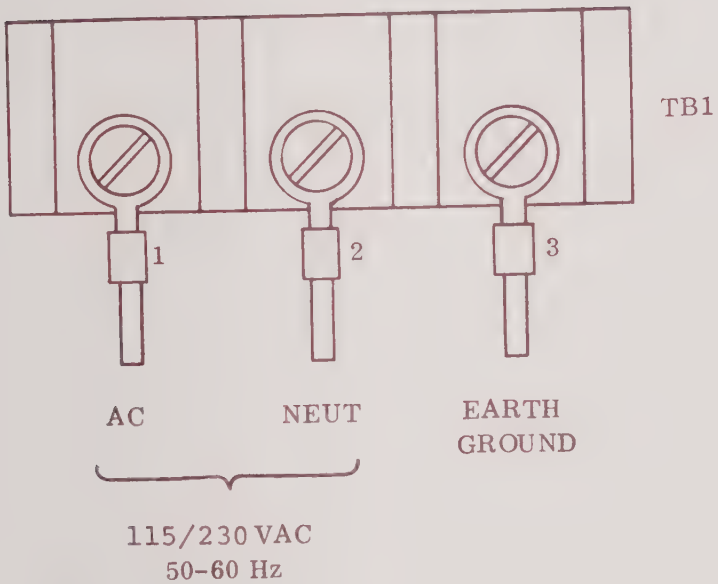


PRIME POWER CONNECTIONS

FIGURE 3-1

### 3.4.1 SHIPPING CONTAINER

Place the system in the original shipping container, making sure that there is adequate packing material around all sides of the system, and that the front panels are protected with thick cardboard strips. If you do not have the original container, use heavy wooden boxes with adequate protection.

### 3.4.2 SEALING CONTAINER

Seal the shipping containers with heavy tape or metal bands.

### 3.4.3 MARKING

Write the words "Fragile", "Delicate Instrument", etc. in several places on the outside of the shipping container.

NOTE

> If the system is to be shipped to Varian for service or repair, attach it to a tag identifying the owner. Also indicate the service or repair desired, the problems encountered and any other information that would be of value to the service facility.

In all correspondence, refer to the unit by both the model and serial numbers.

Please use the following shipping address for all returned products:

Varian
Microwave Equipment Operations
317 Brokaw Road
Santa Clara, California 95050
Attention: Product Support

SECTION 4

## 4.0 OPERATION

This section describes the normal operation of the 1-20 watt series TWTA. The operating modes, the controls indicators and meters, and the turn-on turn-off procedures will be discussed. All controls used in normal operation are located on the front panel of the TWTA. Status and fault indicators provide displays of status of the unit at all times.

Once the unit has been placed in operation, it is suggested that a log be kept which records meter readings, approximate running time and approximate RF power output.

## 4.1 OPERATING MODES

There are four operating modes for the TWT amplifier. The modes are: F.T.D. - Filament Time Delay, STDBY - Standby, HV ON - High voltage on and fault.

### 4.1.1 F.T.D. - FILAMENT TIME DELAY

In this mode, as indicated by the F.T.D. indicator LED, the power supply is providing only heater power to the TWT. The helix and the collector voltages are inhibited during the time delay phase. The power supply enters this mode immediately when the "Power ON" button is pushed and remains in this mode for approximately 3 minutes. After the TWT heater has reached its operating temperature, the high voltage may be applied.

The filament time delay circuitry provides for proportional time delay in the event that a prime power failure occurs. If the HV ON is in the high voltage on condition and a prime power failure occurs, then when

prime power is restored, the TWTA will cycle in time delay proportional to the length of time of the power failure. The high voltage will then automatically turn itself on after time delay. If the high voltage is in the off condition at a power failure, then the TWTA will cycle in time delay proportional to the power failure and stop in a standby mode.

### 4.1.2 STDBY - STANDBY

This mode is indicated by only the STDBY LED being lit. In this mode, only filament voltage is applied to the TWT and high voltage can be applied by operating the HV ON switch. Standby is defined as no filament time delay, high voltage off and no faults existing.

### 4.1.3 H.V. ON - HIGH VOLTAGE ON

The HV ON indicator lights whenever the HV ON control switch has been pressed requesting the HV ON and the high voltage is on, i.e., the collector and helix voltages are applied to the TWT.

### 4.1.4 FAULT

The Fault mode is indicated by the FAULT indicator being lit. The fault indicator is a summary alarm. The following faults cause the fault indicator to light: high helix current, TWT overtemperature, internal interlock. The fault indicator also indicates a lockout condition. The HV ON switch must be turned off to reset the fault and then turned on again to enter a HV ON condition.

**WARNING**

LETHAL VOLTAGES UP TO 6 KV ARE PRESENT IN THE POWER AMPLIFIER WHEN IT IS OPERATING. USE EXTREME CAUTION WHEN WORKING INSIDE THE UNIT. AS AN ADDED PRECAUTION, IT IS RECOMMENDED THAT ANOTHER PERSON BE PRESENT TO GIVE AID IN CASE OF ACCIDENT.

## 4.2 METERS CONTROLS AND INDICATORS

Figure 4-1 is a photograph of the front panel of the TWTA. Each function is titled and brief definition is given.

## 4.3 INITIAL TURN-ON

Initial turn-on differs from normal turn-on in that certain precautions must be taken to protect the power amplifier against damage from unknown conditions. Once proper overall operation is verified in the final installation, turn-on and turn-off can be accomplished as described in subsequent sections.

CAUTION

PRIOR TO PROCEEDING WITH INITIAL TURN-ON ALL PROCEDURES DEFINED IN SECTION 3 SHOULD BE COMPLETE AND VERIFIED.

### 4.3.1 PRE-POWER CHECK

Prior to applying prime power to the system, verify that the following conditions are met:

a. Available prime power voltage is within the ratings of the amplifier and that the interconnections in the amplifier have been made for the appropriate input voltages.

b. The output is terminated in a load capable of dissipating at least twice the rated output power at the intended operating frequency.

c. The load VSWR is less than 1.5:1.

d. The RF drive source is set to the correct frequency and preset to minimum output.

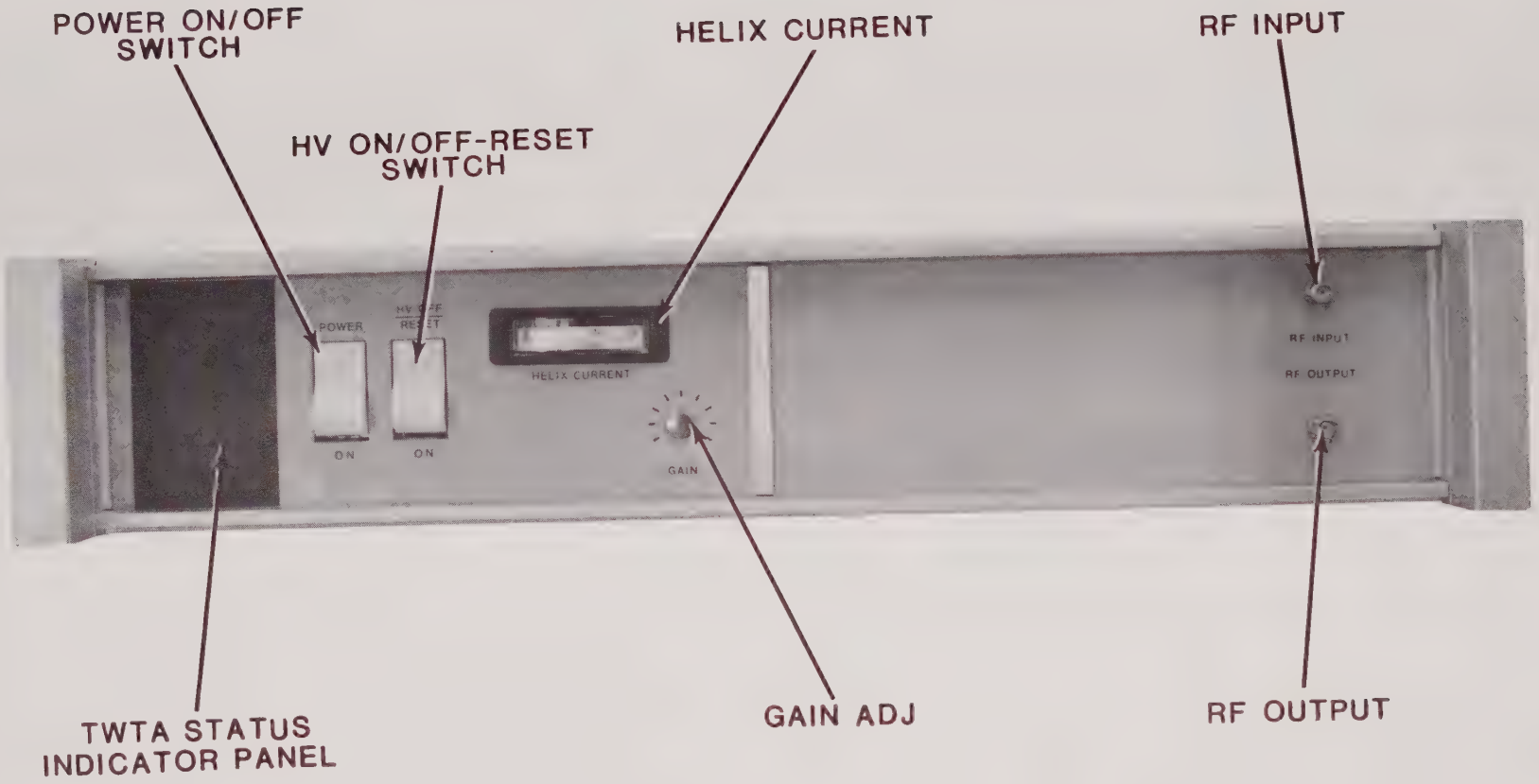


FIGURE 4-1

TWTA FRONT PANEL

e. The rear exhaust air duct and air intake duct from the TWT assembly is not blocked.

Failure to observe any of the above conditions can cause catastrophic damage to the unit and will void the warranty.

4.3.2 TURN-ON SEQUENCE

a. Rotate the GAIN control fully CCW (minimum output power level).

b. Turn on the Power ON Switch. Verify that the logo indicator illuminates. Verify that the TIME DELAY indicator is illuminated. No readings should be obtained on the helix current or beam current meter at this time.

c. Approximately 3 minutes after power is applied, the TIME DELAY indicator should extinguish, and the STANDBY indicator should illuminate.

d. Depress and latch the HV CONTROL switch. Verify that the STANDBY indicator extinguishes and the HV ON indicator illuminates. Verify that a helix or beam current reading is obtained on the meter. Verify that this reading is consistent with the tube data sheet supplied with the unit.

e. Apply RF drive and verify using an external power meter that RF is being amplified. If no reading is obtained on the external power meter, increase the GAIN control until the desired output is obtained.

f. Depress the HV CONTROL button. Verify that the HV on indicator extinguishes, and the STANDBY indicator illuminates.

The power amplifier system is now in normal operation, and may be turned on and off as described below.

## 4.4 NORMAL TURN-ON

Once the steps defined in Section 4.3 have been completed, normal turn-on can be accomplished very simply, unless there is reason to suspect that a significant change in operating conditions has occurred during the off time. The following steps assume that the normal turn-off procedure has been followed:

a. Turn the power switch to the ON position, and verify that the logo and TIME DELAY indicators are illuminated.

b. When the heater time delay is complete, verify that the TIME DELAY indicator extinguishes and that the STANDBY indicator illuminates. Operate the HV CONTROL switch and verify normal current meter reading and output RF level.

c. If automatic turn-on is desired, the HV ON switch should have been left in the fully depressed and latched position prior to turn-on. In this mode, when the heater time delay is complete, the unit will automatically return to full operation with high voltage ON and RF output.

## 4.5 TURN-OFF

If the power amplifier is to be turned off for a short time, (e.g., less than 2 hours) it should be placed in STANDBY by operating the HV ON control switch. This permits the fan to run and minimizes thermal and electrical shock on the heater. If the off-time is to be extended, the unit should be turned off completely to save heater life and prime power.

a. Depress and release the HV ON switch to turn high voltage off.

b. Let the system run in the STANDBY mode for 5 minutes in order to cool the TWT and all other components.

c. Turn the power switch to the off position to remove prime power from the unit.

d. If automatic return to full operation is desired on subsequent turn-on, the HV ON switch may be left in the ON position when the main power is turned off. This operation is permissible but is generally not recommended, since it produces a thermal rise in the TWT at turn-off, and since turn-on will occur without an operator verifying that normal conditions exists.

e. If the off-time is to be extended, such that there is likelihood of changing operational conditions prior to the next turn-on, it is recommended that the steps for initial turn-on be followed at the next turn-on.

SECTION 5

## 5.0 THEORY OF OPERATION

This section provides a detailed description of the theory of operation of the overall TWTA. The theory of operation is presented at two separate levels. The first level is a detailed block diagram description. The second level is a module by module description at times down to the component level.

Detailed schematic diagrams for each of the major subassemblies defined in this section are included in Section 7 of this manual, and should be used for reference in the following text description.

Understanding the theory of operation of the TWT amplifier is a necessity for the technician who will maintain the equipment, and an asset for the operator. A thorough understanding of the theory of operation of the equipment provides for a more efficient operation, and quicker and more effective repairs if problems develop. This section should be completely understood prior to any maintenance activity being conducted on the system.

The RF circuitry will be discussed using the block diagram approach. The power supply section will be discussed using the block diagram and a detailed approach.

## 5.1 FUNCTIONAL BLOCK DESCRIPTION

This section provides a description of the RF and power supply sections.

### 5.1.1 RF SECTION

For the description that follows, refer to Figure 5-2. Figure 5-2 is a photograph with each of the RF components called out.

The RF circuit consists of a medium power TWT and its associated input and output cables and special components. The input and output of the TWTA is via a coax line or flexible waveguide.

The microwave amplifying element in the amplifier is the Varian traveling wave tube (TWT). These TWT's have a typical gain of 30-60 dB at rated output power of 1-20 watts. The TWT is a wide bandwidth amplifying device and thus covers typically an octave or more with no tuning required.

TWT's operate in the following manner: Electrons are emitted by the cathode and are accelerated down the center of the helix by the helix to cathode potential. Here they interact with the RF input signal traveling down the helix. This interaction between the electron beam and the RF wave results in a transfer of energy from the beam to the helix RF wave. Upon traversing the length of the helix the electrons (now travelling somewhat slower due to the energy given to the RF wave) strike the collector and are returned to the power supply.

### 5.1.2 POWER SUPPLY SECTION

The power supply section will be discussed in relation to Figure 5-3, power supply block diagram. The general flow of the functional blocks of the block diagram is from left to right, and from the bottom to top.

This TWT amplifier is equipped with input circuitry to permit operation from a 115/230 VAC 50/60 Hz source. The circuitry included are: input transformer, bridge rectifier and a capacitance filter. Refer to the TWTA assembly Interconnect Diagram. Detail A on this diagram defines and shows the hookup used for the components. The primary tap selections are determined by the notes defined under Detail A. The DC output of this section is typically 48-65 VDC unregulated.

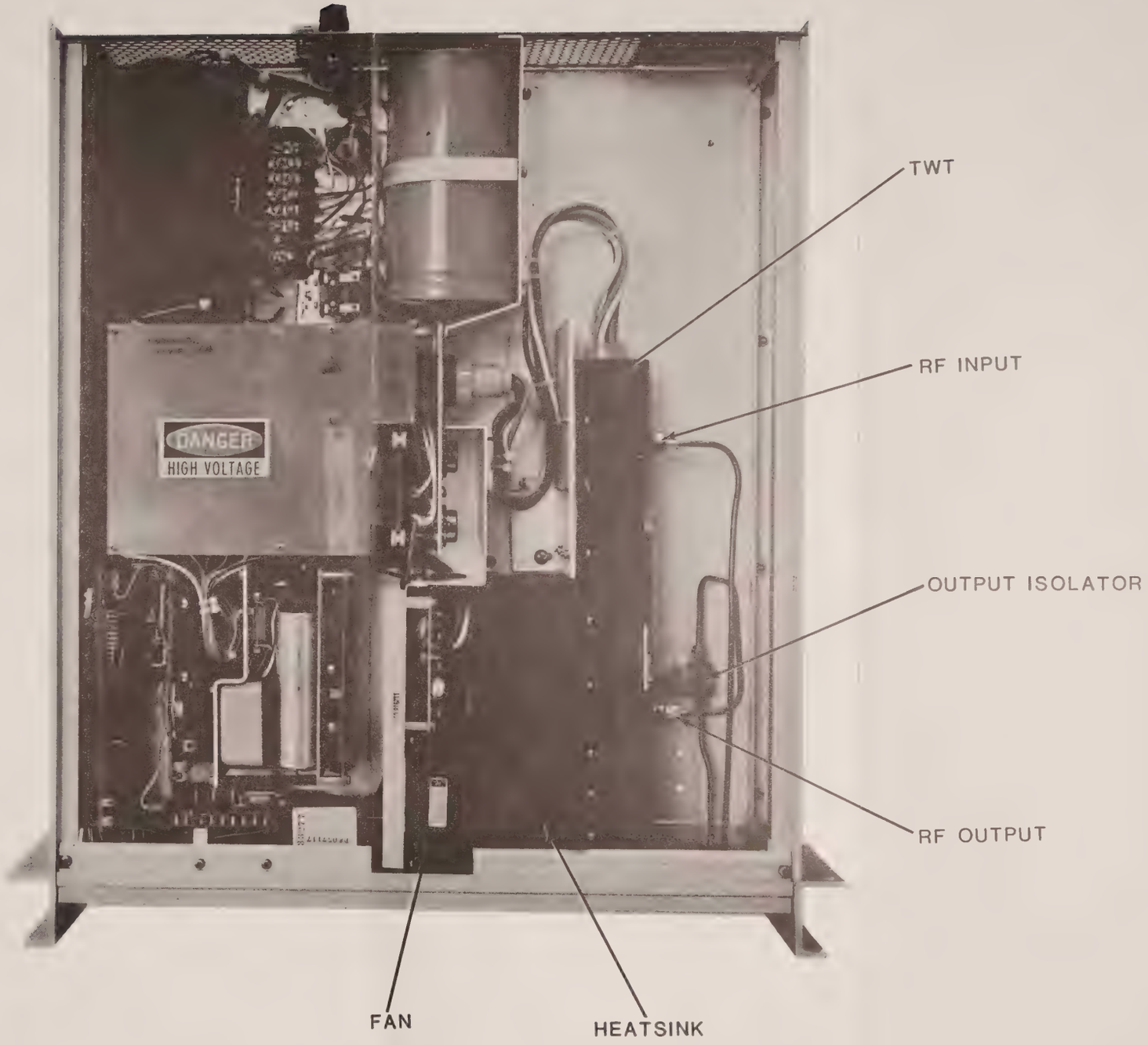


FIGURE 5-2
RF COMPONENTS

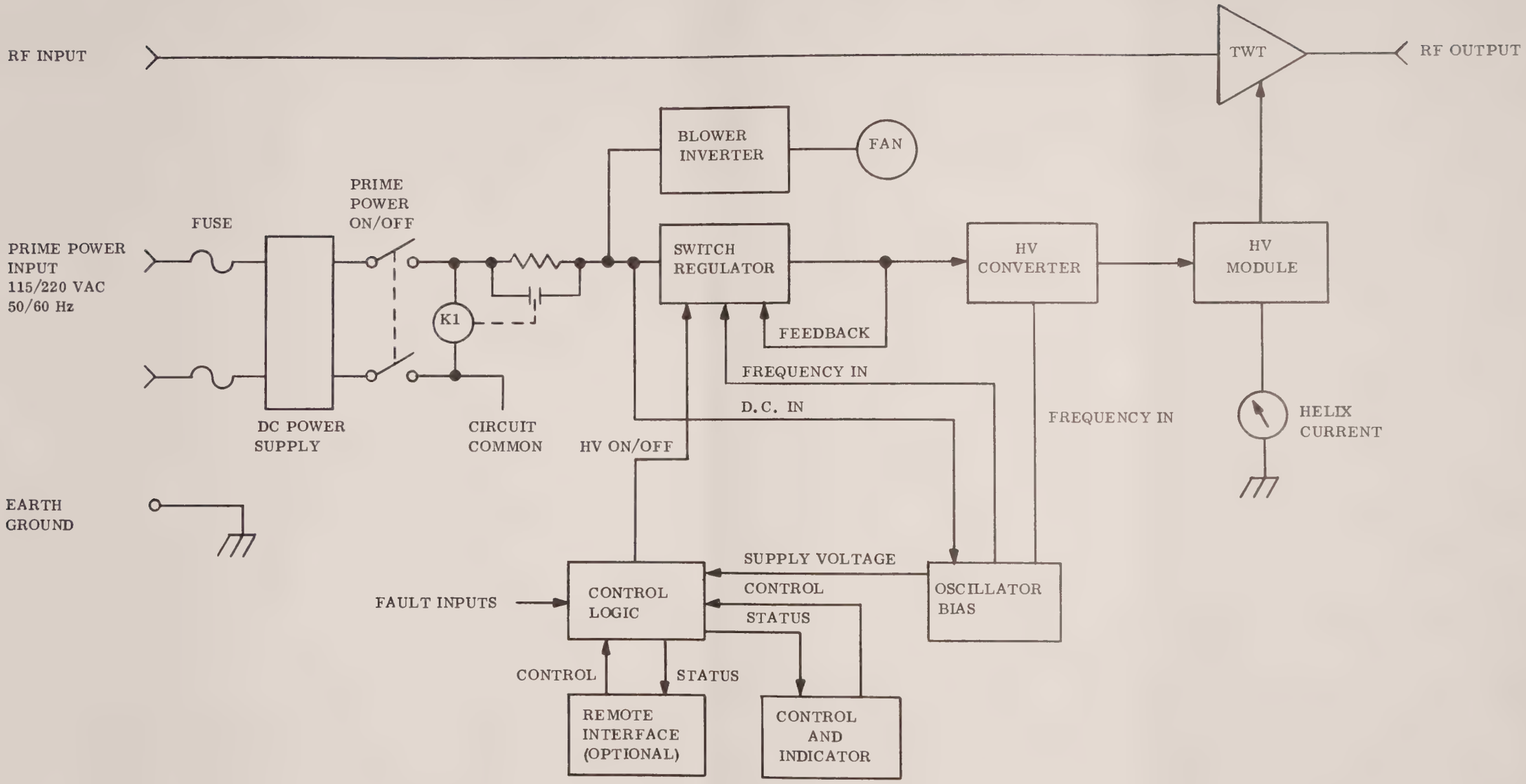


POWER SUPPLY BLOCK DIAGRAM
FIGURE 5-3

The terminal block at the rear of the TWTA as shown in Figure 5-4 is where the prime power enters the unit. The fuses are mounted above the input terminal block at the rear of the unit.

The prime power ON/OFF switch located on the front panel applies 115/230 VAC to the power transformer. The following rectifier and filter supply nominally 48 VDC to the switching regulator and the oscillator bias card.

The switching regulator is the main line and load regulating element in the power supply. The switching regulator receives ON/OFF control from the control logic and defined frequency (40 KHz) from the oscillator bias supply. The output voltage from the switching regulator is fed back to a control input for line and load regulation.

The high voltage converter chops the switching regulators approximately 35 VDC output into a 35V, 20 KHz square wave. The 20 KHz frequency is derived from the oscillator bias assembly.

The output from the HV converter is fed into the input step up transformer of the high voltage module. The high voltage module converts the 20 KHz 35 VDC input into the TWT's required operating voltages for the helix, collector and the filament. The HV module also provides the access point for the helix or beam current meter.

The control logic receives inputs from the control and indicator block, the oscillator bias supply, fault input and remote control commands. The control logic supplies the ON/OFF command to the switch regulator, status indication to the remote interface and status information to the control and indicator block.

The oscillator bias module receives the DC input voltage from the input rectifier circuit. The synchronized 40 KHz and the 20 KHz is sent to the switching regulator and the HV converter. A supply voltage is provided to the control logic for powering the circuits. A 32 Vdc line is provided to the fan. The fan provides the required cooling of the TWTA.

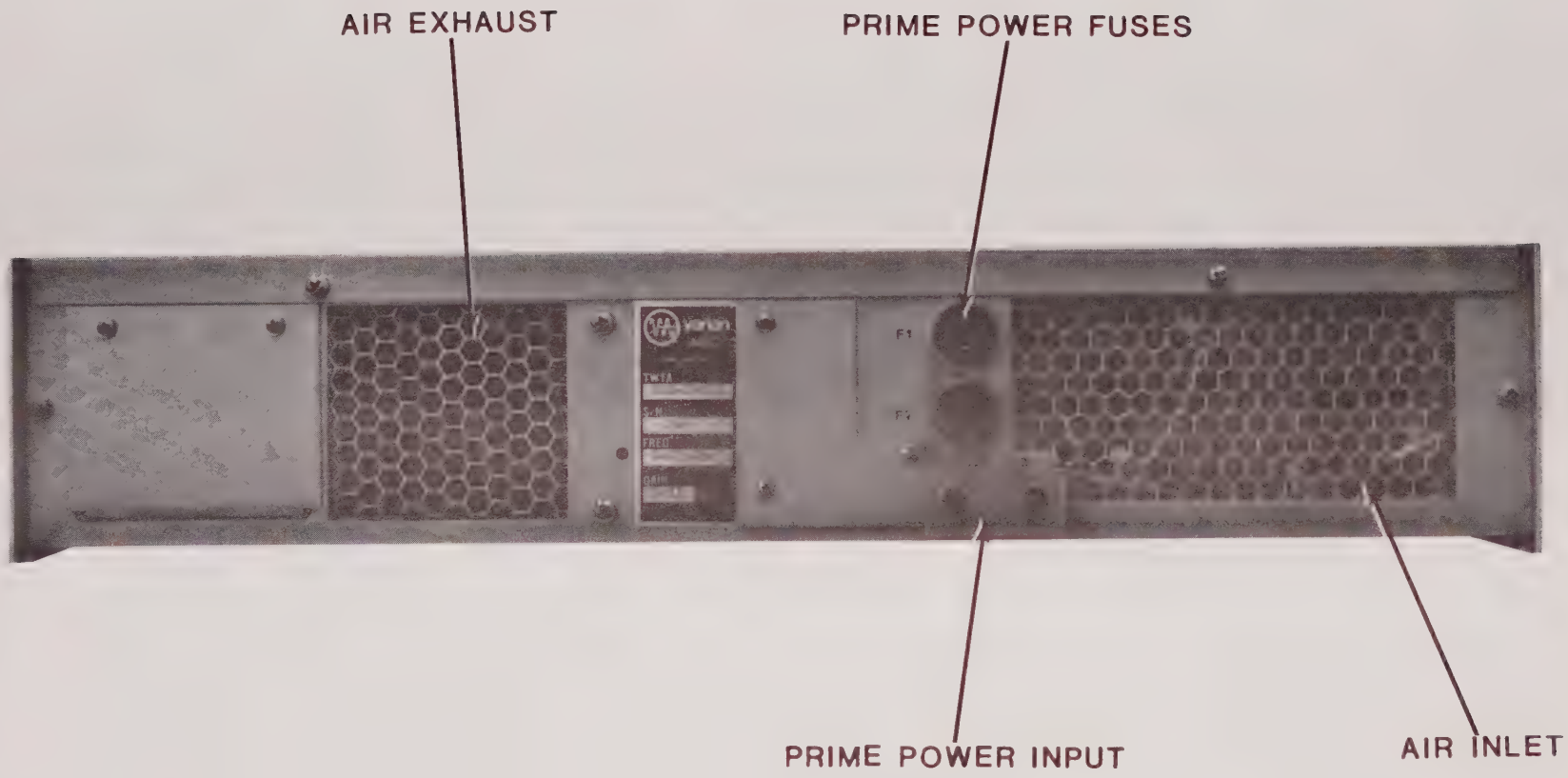


FIGURE 5-4

TWTA TERMINAL BLOCK

The control and indicator module receives status information from the control logic and transmits control information to the control logic. The control and indicator module physically is the front panel PCB that mounts on the front panel.

Each of the modules described above is a discrete PCB or module containing two PCBs. The power supply is modularized. Figure 5-5 shows and defines each of the modules. In the physical unit, a mother board and several cable assemblies tie it all together.

## 5.2 POWER SUPPLY DETAILED DESCRIPTION

This section will provide a detailed description of each of the modules discussed in the previous section. Each module's function will be discussed in relation to the detail schematics contained in Section 7. Section 7 also contains an overall schematic diagram. This overall schematic is basically the block diagram (Figure 5-3) with the detailed schematics substituted in for each block. As appropriate summary schematics will be discussed in relation to the detailed module schematics.

### 5.2.1 SWITCH REGULATOR ASSEMBLY

Unregulated DC voltage enters the switch regulator on PC board #2 at inductor L1 on the terminal E1.

The main switch regulator path is through R1 (.01 ohms), Q1, L1 to C1 on PCB #2. The transistor Q1 varies the length of time of application of voltage from C2 to C1. L1 and C1 comprise an L.C. filter. The regulation is via pulse width modulation. Resistor R1 (.01 ohms) senses an overcurrent condition. Amplifiers A1 and A2 amplify this current sensed across R1 (.01 ohms) and shut off transistor Q2 if the current in R1 is larger than the preprogramed value set in using the variable resistor R2.

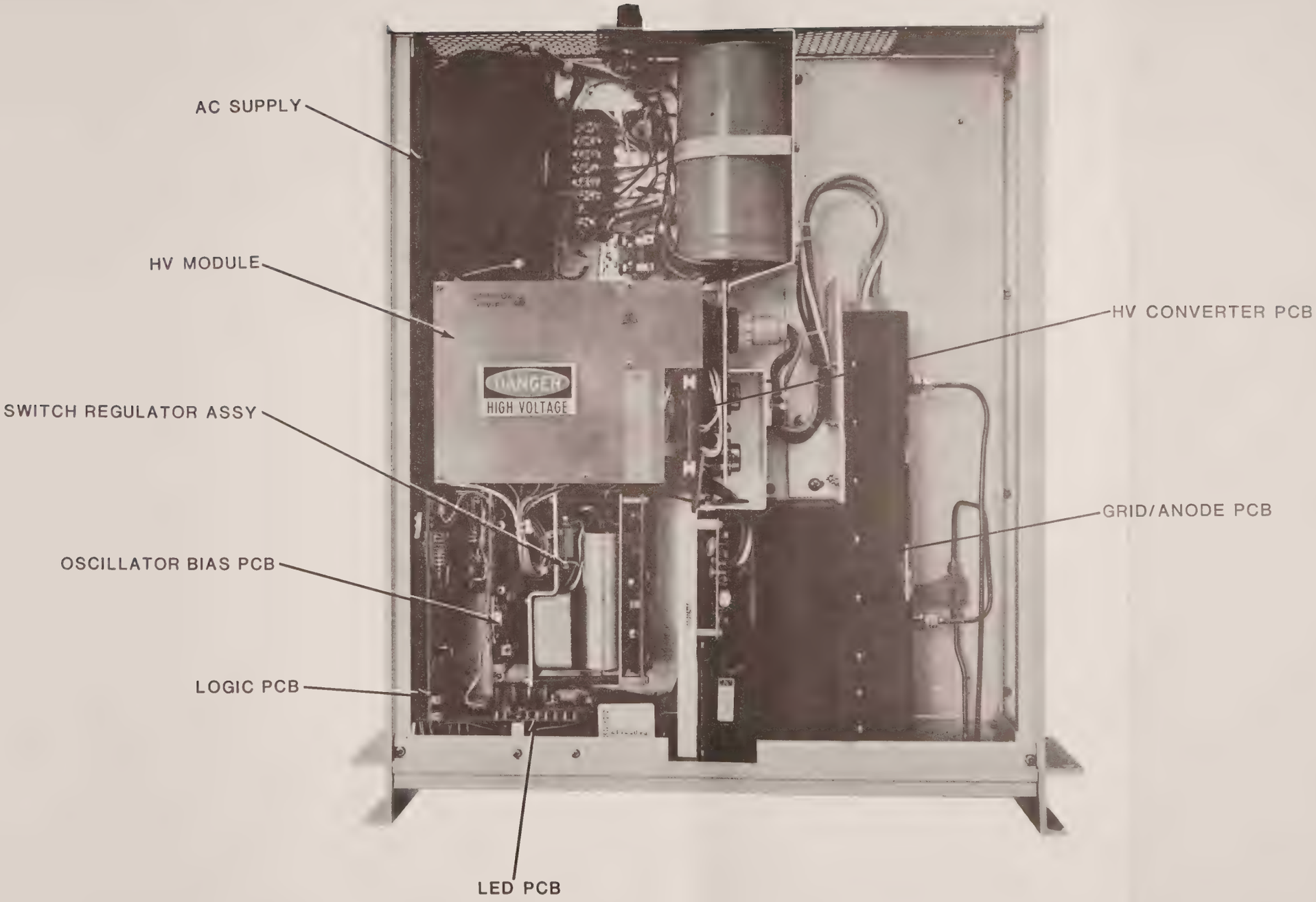


FIGURE 5-5
POWER SUPPLY MODULES

Transistors Q1 and Q2, Q2 on PCB #1 comprise the switch for the switch regulator. These transistors, in the Darlington configuration, are either full on or full off depending on the pulse width modulation control signal coming from the collector of Q4.

The collector of Q4 is the output of a Schmidt trigger composed of Q4, Q5 and its associated circuits. The input of the Schmidt trigger (base of Q5) senses the voltage (7V) across C6. C6 has two charge paths.

The first charge path for C6 is R18, Q3 and R22. The time for C6 to charge to 7V determines the off time of the output switching transistors and thus a lower output voltage. R30 (variable resistor) varies the collector emitter resistance of Q3 through the off time of Q1, Q1 and Q2 and finally the output voltage developed across C1 on CB #2; which is typically 33 Vdc. R30 is used to set the open loop output voltage of the switching regulator.

The second charge path for C6 is A3, CR7 and R23. Amplifier A3 amplifies the error voltage sensed across the output of the switch regulator. R11 (variable resistor) is used for setting the closed loop output voltage of the switch regulator.

Transistor Q6 and circuits; with base drive provided from the oscillator bias circuit, discharge C6 and allow it to charge at a 40 KHz rate. The pulse for Q6 that discharges C6 is .5 microseconds wide.

ON/OFF control for the switch regulator is provided from the control logic at pin J1-1 through U1 and Q9. Q9 stops the Schmidt trigger from functioning, thus turning off the switch regulator. Transistors Q7 and Q8 discharge C1 on CB #1 also at the off command.

### 5.2.2 HV CONVERTER

The high voltage converter transforms the stabilized output voltage (33) of the switching regulator to a 20 KHz drive that is applied to the high voltage module. Transistors Q5 and Q6, located on the heatsink of the

HV module, operate as push-pull drivers for the primary of the high voltage transformer. Zener diodes CR6 and CR7 limit any peaks of greater than 100 Vdc from appearing across Q6 and Q6. Base drive for Q6 is provided by transistors Q1 and Q4 respectively. Base drive for Q1 and Q4 is provided from the oscillator bias circuit. Dead time for transistor Q1 and Q4 is derived from the charge time of C1, R3 and C2, R5.

ON/OFF control for the HV converter is provided through the switching regulators from the control logic. This function is provided by transistors Q2, Q3 and circuits.

### 5.2.3 HV MODULE

#### a) 10-20W Models

The high voltage module accepts two inputs: 33 Vdc to the HV concerter and a 40 KHz 40 volt input to T1. The HV converter drives T2 which gives the collector and the helix voltages. The output of T1 supplies the filament voltage.

The full output of T2; the HV stepup transformer is full wave rectified and filtered by CR1 and C2 on HV module PWB #C112827. The output at E5 is applied to the collector of the TWT. The negative side of the collector supply (CR1 and C2) is filtered via L1 and connected to the cathode of the TWT through E6 of PWB #C112831. The collector voltage is typically depressed 50-60% with respect to the helix voltage and is set by T2 secondary taps and switch regulator output adjust.

The helix voltage is also derived from the HV transformer T2. The helix voltage is voltage doubled using CR1 and CR2 (SMF10K), C1, C3 and C5, capacitor C4 is a final stage helix filter. Gross adjustment is obtained by selection of taps on T2 secondary. Fine adjustment is via adjusting output of switch regulator.

The helix output voltage is then applied to the TWT through R6 and CR7. R6 is the helix current sense resistor. A voltage proportional to the helix current is developed across R6, filtered and limited by C3 and CR9 on PWB #C112831. This signal is then sent to the logic PWB for fault sensing. The plus side of the helix supply is grounded and the minus side goes to the cathode. The helix current flows out of PWB #C112831 at J1-4 to the helix current meter and returns at J1-J2; diode CR8 protects the meter from transients.

The 40 KHz filament voltage from transformer T1 on PWB #C112831 is rectified and filtered via CR2, CR3, CR4, CR5 and C1. Transistor Q1, Q2 and Q3 provide crude regulation, but mainly provide a means of adjusting the filament voltage using R3. Zener diodes CR1 and CR6 are for over-voltage protection of the power transistor and the filament.

b) 1-5W Models

The 1-5 watt TWT's operate from a single helix/collector supply. To accomplish this, several changes to the 10-20 watt version are made. These are as follows:

1. CR7 on 112831 is removed and replaced with a short.
2. R6 value is decreased to 100 ohms and passes the total beam current.
3. The voltage doubler CR1/CR2 is defeated by connecting 112827-E3 to 112831-E10.
4. TWT connections are revised at J1 so that:

   J1-A not used
   J1-B connects to Helix/Collector
   J1-C connects to Grid
   J1-D connects to Cathode/Heater
   J1-E not used
   J1-F connects to Heater

5. Front panel meter is changed to read Beam Current 0-50 mA.

### 5.2.4 OSCILLATOR BIAS

The oscillator bias PCB provides the TWTA with its required operating voltages and voltage waveforms. It is the power supply's power supply. The input to the OSC Bias is at the emitter of Q1, through connector J1-J with the return at J1-H. Transistor Q1 is the series pass element that regulates the -48 Vdc input to a stable -40 Vdc output at the collector of Q3. Transistor Q2, constant current diode CR4 and the 723 regulator U1 provide the error regulation as sensed across resistor R11. The variable resistor R15 sets the output voltage to approximately -40 Vdc.

Transistors Q4 and Q5, connected as push-pull stages on transformer T1, operate in a self-oscillating mode. The transistors drive into taps 9 and 11 referenced from tap 10 of transformer T1. A base drive waveform is taken from taps 6 and 8 referenced from tap 7. This waveform drives Q4 and Q5. The oscillator operates at approximately 40 KHz $\pm$ 2 KHz. The saturable core inductor L1 determines the particular operating frequency of the oscillator as determined by the volt-second product across it. The circuit consisting of CR7, C7 and R16 is the starter for the oscillator.

The combined outputs of the Q4, Q5 collector waveform are brought out at pin J1-L, to the switch regulator, through R1 R2, C1 C2, R3, R4 and CR1, CR2. The output of this differentiator is a .5 microsecond pulse at the 40 KHz switch regulator frequency. The collectors of Q4 and Q5 also drive the primary of the filament transformer at a 40 KHz rate.

The output of transformer T1 at taps 5 and 3 referenced to tap 4 drive the HV converter in the HV module.

The output taps 12 and 1 referenced to tap 2 provide approximately 29 Vdc after rectification, filtering and partial regulation. U2 provides a stable +12 Vdc for the logic circuits and L.E.D.'s minus 17 Vdc is provided which, with the +15 Vdc operate the fan for the TWTA.

## 5.2.5 CONTROL LOGIC

The logic circuits provide the control monitoring and protection of the TWTA. Typical control and fault inputs are shown on the left side of the schematic.

If a remote/local switch is included, it gates the selection of remote or local control of the HV on/off command. The gating is from U10-13 to U6-6 to control the section of local at U12-9 or remote at U12-2. The on/off command then is sensed at U9-3 with a no fault condition and controls transistor Q4 to turn on the switching regulator and Q3 to turn on the HV on L.E.D.

The HV on/off command is also summed with a no fault condition at U9-11 and a no FTD condition at U9-10 to provide the (standby) STDBY LED indication. The FTD indicator, driven by the collector of Q5, is on any time that the time circuit is operating.

Zener diode CR4, inverter Q1 and U6-12 limit the logic circuit operation to only function in the range of 9 to 12 Vdc. Capacitor C21 and R24 through inverters U11-4 and U3-12 if HV is on at U9-4 operate an inhibit at the collector of Q2. This inhibit limits any fault from appearing on initial power turn-on.

Capacitor C22 and R29 determine the helix current fault inhibit when HV is initially turned on. This inhibit time is typically 50 milliseconds.

The helix overcurrent fault is sensed by U7-8 at the HV module. Variable resistor R3 sets the helix current trip point. The fault signal is double inverted and sets as a low the R.S. latch U4-4. The fault signal is picked off U4-4 and summed at the input of U5. The other faults operate in a similar manner and end up at the input to U5. Fault memory is obtained at U1-1 from U5-1 via U6-15. The HV off command resets all of the R.S. latches to the no fault state by applying a ground to the S input.

The timer circuit shown in the lower right hand corner of Schematic E112836 is contained on the mother/timer board but will be discussed here.

The timer circuit provides the 3 minute proportional time delay after initial power turn on to enable the filament of the TWT to reach emission temperature. When power is initially turned on, +12 Vdc is applied to the timer circuit at X1A1A2-4. It takes the integrator consisting of R1, R3 and C1 approximately 3 minutes to reach a charge. At this time U2-9 changes state to a plus level. This turns on U1 which further changes capacitor C1. On prime power turn off capacitor C1 starts to discharge at a rate proportional to the length of off time, so that when the power is re-applied, the timer will only charge at a rate proportional to the off time.

### 5.2.6 CONTROL AND INDICATOR (LED PCB)

The LED PCB contains the system (prime power) on/off switch, the HV on/off switch and the LED's with their current limiting resistors. The several LED's in series back light the FAULT, HV ON, STDBY, FTD and prime power on logo. The LED's are driven by the transistors discussed in the logic section previously. The LED PCB also provides for through traces for such things as the fan power, helix or beam current meter and thermal interlock circuits.

### 5.2.7 MOTHER/TIMER

The Mother/Timer PCB contains the timer circuit that was discussed in the logic section above and the major interconnection points for the power supply. The logic, oscillator bias, switch regulator and the HV module all interconnect through this board. Refer to TWTA interconnect diagram shown in Section 7 for a block review of the interconnection of the various physical components of the amplifier.

### 5.2.8 GRID/ANODE PCB

The Grid/Anode PCB is designed to operate in conjunction with the Varian standard 3-1/2 inch traveling wave tube (TWT) amplifier. The Grid/Anode PCB allows front panel RF gain control of the TWT. There are four possible internal configurations of the TWT amplifier: the standard anode, the positive anode, the negative grid and the positive grid. The following table and figure shows the internal configurations, controls and connections for the Grid/Anode PCB. See Schematic in Section 7 of this manual for the Grid/Anode PCB external connections.

Note that in the standard anode and positive anode configuration, an adjustment of the Front Panel RF Gain control varies the anode voltage, while in the negative grid and positive grid configurations, an adjustment of the Front Panel RF Gain control varies the grid voltage.

The voltage doubler consisting of CR1, CR2, C1 and C2 supplies the DC voltage necessary for the negative and positive grids. The DC voltage for the positive anode is supplied across the zener diode CR9 located on the High Voltage PCB and in series with the Helix.

Q1 and Q2 on the Grid/Anode PCB supply current gain needed for the positive grid configuration.

## GRID/ANODE INTERNAL CONTROLS AND CONNECTIONS

STANDARD ANODE:

Connect E10 to E12
Connect E8 to E9
Connect R11 to any combination of up to 3 one Meg resistors (E2 to E7).
R11 determines range (Front Panel Control).
R10 determines + Limit.

POSITIVE ANODE:

Same as Standard Anode except connect E1 on Grid/Anode PCB to E4 on 1A1A1A2 High Voltage PCB.

NEGATIVE GRID:

Connect E16 to R3 (center tap)
Connect E13 to E11
Connect E12 to E8
R1 determines - limit
R2 determines range
R3 Front Panel Control

POSITIVE GRID:

Connect E11 to E12
Connect E16 to E17
Connect E19 to R3 (center tap)
R1 determines + limit
R2 determines Range
R3 Front Panel Control

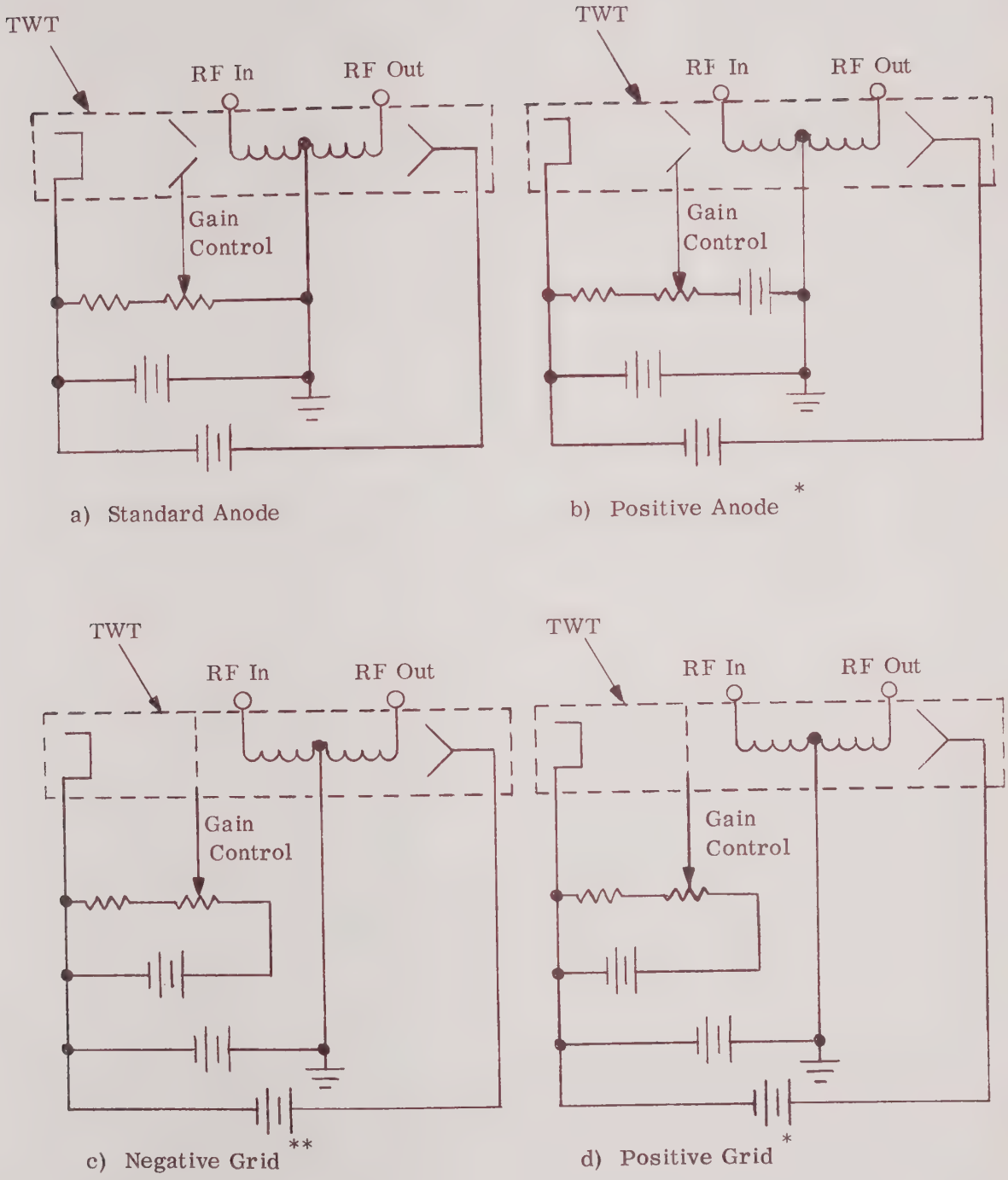


* Positive with respect to the helix
** Negative with respect to the cathode

FIGURE 5-6

THE FOUR DIFFERENT INTERNAL CONFIGURATIONS USED IN THE TWT AMPLIFIER SYSTEMS

SECTION 6

## 6.0 MAINTENANCE

Instructions for maintenance of the Power Amplifier are presented for the functions of: Preventive Maintenance, Adjustments and Calibrations, and Corrective Maintenance, which includes troubleshooting and repair.

In the event that repair and/or modification to this amplifier is not performed by Varian or under Varian's direction, the warranty of the unit may be voided at Varian's sole discretion. See warranty information included at the rear of this manual.

If the system is not operating properly, and you cannot or do not intend to service it yourself, contact your nearest Varian field office for assistance.

### WARNING

LETHAL VOLTAGES UP TO 6 KV ARE PRESENT WHEN POWER IS APPLIED TO THE SYSTEM. BE EXTREMELY CAREFUL WHEN WORKING INSIDE THE UNIT. USE ONLY ONE HAND TO MAKE MEASUREMENTS OR ADJUSTMENTS. IF POSSIBLE TURN POWER OFF BEFORE MAKING ADJUSTMENTS. DO NOT ATTEMPT TO REPAIR OR TROUBLESHOOT THIS UNIT UNLESS YOU HAVE HAD EXPERIENCE IN SERVICING BOTH MICROWAVE AND HIGH VOLTAGE SYSTEMS.

Prior to applying power to the unit, verify that a suitable RF load, adequate to handle up to 60 W CW without damage, and with a maximum VSWR of 1.5:1 across the power amplifier operating range, is provided at all times. Operation of the system without a suitable load can damage or destroy the TWT.

## 6.1 TEST EQUIPMENT REQUIRED

Table 6-1 is a list of test equipment required in order to perform the maintenance routines described in subsequent sections. Equipment with equivalent accoracy or capacity may be substituted.

## 6.2 PREVENTIVE MAINTENANCE

This section presents information required to conduct preventive maintenance operations for the Power Amplifier. Preventive maintenance comprises periodic visual inspection, routine cleaning, and those regularly scheduled service operations recommended to ensure system performance and accuracy levels.

As a major aid to maintenance, it is recommended that an operations log be maintained for the equipment. The log should be used to record all meter readings daily and should note preventive and corrective maintenance conducted. Analysis of long term changes in operational conditions is of great value in predicting potential failures, and in quickly analyzing cause of failures.

### 6.2.1 VISUAL INSPECTION

At periodic intervals, the TWTA should be inspected to permit early detection of wear or damage which, if properly corrected, will prevent equipment malfunction or failure. Inspections should include, but not be limited to, visual checks for wear, breaks, deterioration, fungus, excess moisture, mounting integrity, and other similar defects. In a normal environment, inspection should be made at 90-day intervals. If the equipment is subject to severe environmental conditions, such as dusty input ambient air, temperature extremes, or excessive shock or vibration, inspections should be performed on a weekly or monthly basis. Visual inspection items are listed in Table 6-2.

TABLE 6-1

TEST EQUIPMENT REQUIRED

| Description | Manufacturer | Model |
|---|---|---|
| Sweep Signal Generator | Systron Donner/Kruse | 540 with correct plug in for frequency range. |
| Coaxial Termination | Narda | 369BNM/NF |
| Waveguide Termination | Waveline | 781 |
| Directional Coupler | Narda | 3040-3045 Series |
| | Hewlett-Packard | P752 series 10 dB & 30 d |
| Power Meter | General Microwave | 460B |
| Frequency Meter | Nytek | 9011-A |
| Variable Attenuator | Merrimac | AU15A |
| | Hewlett-Packard | P382A |
| Vacuum Tube Voltmeter | Hewlett-Packard | 1410C |
| Volt-Ohm-Milliammeter | Triplett | 630 |
| Oscilloscope | Tektronix | 475 |
| Differential Voltmeter | Fluke | 895A |
| Voltage Divider | Fluke | 80 F-15 |
| Clip-on Milliammeter | Hewlett-Packard | 412A |
| Power Supply | Hewlett-Packard | 723A |

TABLE 6-2

VISUAL INSPECTION ITEMS

| Item | Potential Fault | Corrective Procedures |
|---|---|---|
| Connector Plugs | Damaged or improperly seated in mating connectors | Replace connector plugs, properly seat replacement plug. |
| Electrical Wiring | Broken, burned or frayed | Repair or replace defective wires. |
| Soldering Connection | Corroded, cracked or dirty | Clean and resolder connections. |
| Chassis Slides | Slides damaged or not sliding freely | Adjust, repair or replace; lubricate using a small stiff-bristled brush and a light coating of Lubriplate No. 111 (or equivalent). |
| Dirt or Moisture Buildup | Short circuits, arcing corrosion, overheating | Cleaning (See Table 6-3). |
| Interlock Switch | Non Actuation | Check actuation distance with the cover. Bend the interlock tap up slightly to provide for positive interlocking. |

### 6.2.2 ROUTINE CLEANING

The necessary materials and outline procedures for cleaning the TWTA are listed in Table 6-3.

**WARNING**

**TURN ALL POWER OFF BEFORE ATTEMPTING ANY CLEANING OPERATION. WHEN USING SOLVENTS BE SURE TO PROVIDE ADEQUATE VENTILATION AND AVOID BREATHING THE FUMES. WHEN CLEANING WITH AIR, WEAR SAFETY GOGGLES AND USE CLEAN, DRY, COMPRESSED AIR, NOT EXCEEDING 25 PSI.**

### 6.2.3 LUBRICATION

Chassis slides may occasionally require lubrication. To perform this maintenance, clean the slide mechanism with an approved solvent; lubricate with a small stiff-bristled brush and a light coat of Lubriplate No. 110 (or equivalent). Wipe off excess lubricant with clean lint-free cloth. No other lubrication is required for the TWTA.

### 6.2.4 PAINT TOUCH-UP

Most finish repairs consist of retouching minor marred or scratched surfaces. A camel's hair brush lightly dipped in a suitable enamel or lacquer will accomplish the touchup desired. Deep scratches, chips, and gouges should first be smoothed or removed by a light sanding with fine (No. 00 or 000) sandpaper and then the surface painted as required to restore the finish.

TABLE 6-3

ROUTINE CLEANING PROCEDURE

| Item | Procedure |
|---|---|
| Chassis | Clean with lint-free cloth, small vacuum or low pressure compressed air. |
| Front Panel Meter | Use a dry, clean cloth, a soft-bristle brush, or a cloth saturated with isopropyl alcohol or a similar cleaning compound. Use a Kimwipe tissue (or equivalent) and GTC glass cleaning compound (or equivalent) to clean the meter faces. |
| Wire bundles and wiring | Clean with a soft-bristle brush, small vacuum or compressed air. |
| Connector jacks and plugs | Remove dust and dirt with soft-bristle brush or lint-free cloth. |
| Circuit Boards | Clean with dry, soft-bristle brush, small vacuum or low-pressure compressed air. |
| Solder connections | Remove dirt, oil and/or excess flux with isopropyl alcohol. Remove corrosion by lightly burnishing with crocus cloth and clean with a lint-free cloth. |
| Waveguide assemblies, clamps, cables and rubberized or plastic parts | Clean with a lint-free cloth moistened with warm soap and water solution; wipe with clear water and dry. Use low-pressure air if available. |

## 6.3 RF PERFORMANCE CHECK

Refer to Table 6-1 for test equipment required. Equipment with equivalent accuracies or capacities may be substituted for testing purposes; select all equipment for the proper frequency band.

### Procedure

1. Set up a microwave measurement circuit, such as the one shown in Figure 6-1.
2. Turn the GAIN control of the TWT unit fully clockwise.
3. Set the output of the microwave signal source to a minimum.
4. Apply ac line voltage to the system.
5. Calculate the input microwave power needed to produce the output power specified on the data sheet, taking into account the specified gain. (The actual input power applied to the unit should never be more than 6 dB greater than the calculated value).
6. Test for gain as follows:

    a. Adjust the input microwave power to give the rated output power (i.e., 1W, 2W, 5W, 10W or 20W) of Step 5.
    b. Measure the input microwave power.
    c. Calculate the gain.

7. Test for saturated output power as follows: Adjust the input power to maximize the output power. This value should exceed the power level specified on the data sheet.

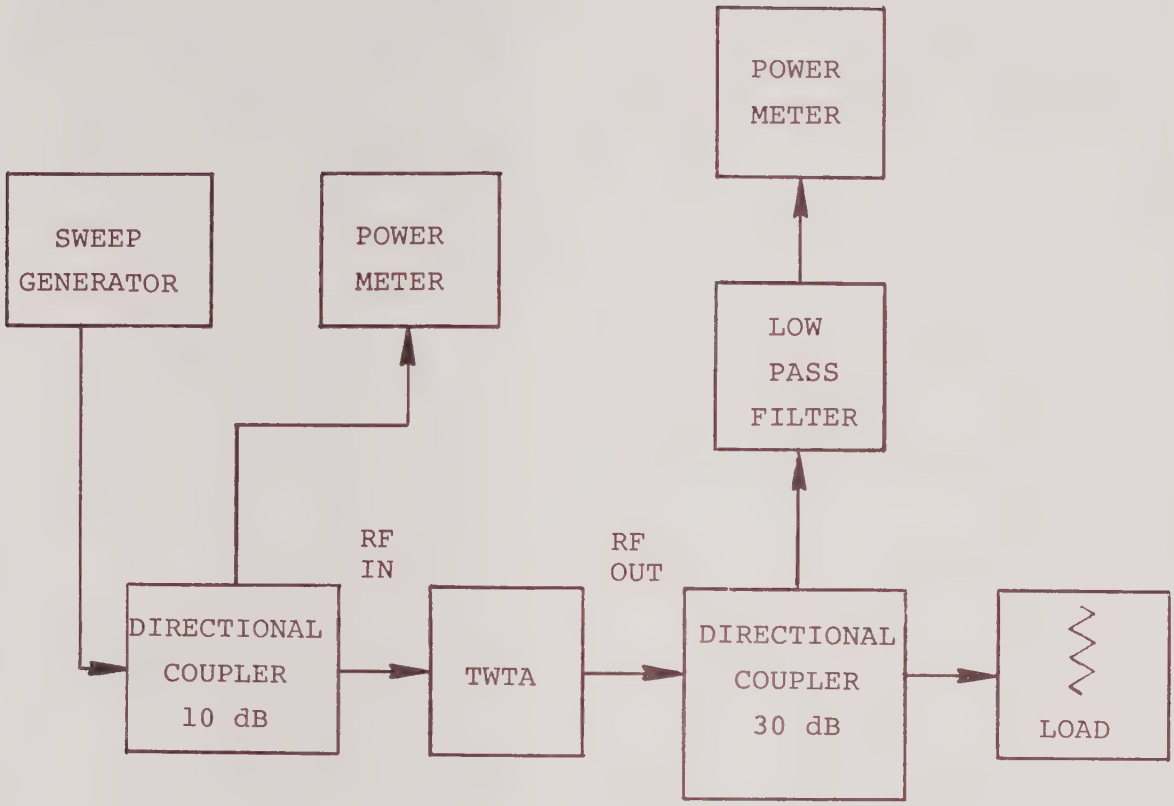


FIGURE 6-1

MICROWAVE MEASUREMENTS CIRCUIT

## 6.4 ADJUSTMENTS AND CALIBRATION

Adjustment and calibration of the Power Amplifier is required when either TWT or a major assembly is replaced or after repairs have been made. No adjustment procedure should be attempted until the Theory of Operation Section of this manual is read and the function of the circuits and circuit adjustments are fully understood.

**WARNING**

LETHAL VOLTAGES UP TO 6 KV ARE PRESENT IN THE POWER AMPLIFIER WHEN IT IS OPERATING. USE EXTREME CAUTION WHEN WORKING INSIDE THE UNIT. AS AN ADDED PRECAUTION, IT IS RECOMMENDED THAT ANOTHER PERSON BE PRESENT TO GIVE AID IN CASE OF ACCIDENT.

### 6.4.1 ADJUSTMENT LOCATIONS

Table 6-4 identifies and defines the functions of the Adjustment Points of the TWTA, and Figure 6-2 indicates the location of the adjustment points.

| LOCATION | FUNCTION | SENSING LOCATION | PROCEDURE |
|---|---|---|---|
| -40V Adj. R15 OSC/Bias PCB | Used to adjust the reference voltage of the oscillator bias supply. | Positive (+) lead to C4 (+) end. Negative (-) lead to C5 (-) end. | Use digital voltmeter and adjust R15 for R15 for a reading of 40.0 Vdc. |
| Regulator Adj. R30 Switch Regulator PCB | Used to make the initial adjustment of the switching regulator output voltage. | Pos (+) lead to E4 of SW REG<br>Neg (2) lead to E3 of SW REG<br>Pos (+) lead to E2 on HV Module<br>Neg (-) lead to E3 on HV Module | With TWT disconnected, adjust for a reading approx. 4 V higher than output needed to develop output required for the particular TWT. See Data Sheet. |
| Helix Voltage Adj. R11 Switch Regulator PCB | Used to set the helix voltage of the TWT | Pos (+) lead of HV Divider to E2 of upper PCB (HV Module).<br>Neg. (-) lead of HV Divider to E6 of upper PCB. | Turn power off and connect HV Divider with DVM. Turn power on and wait for time delay. Turn HV on and adjust R11 for required HV for the helix. |
| Current Limit Adj. R2 Switch Regulator PCB | Used to set the level of peak current through the switching regulator. | R4 (0.01 ohms, 5W, Resistor) Probe ground clip to Neg. (-) end and probe to Pos (+) end. | Connect ungrounded oscilloscope probe directly across R4. Trigger scope when turning HV switch ON. Adjust for a peak voltage of 0.15V when HV is turned on. |
| Helix Overcurrent Trip Adj. Logic PCB | Used to set the helix current trip point. | Neg (-) lead to ground. Pos (+) lead to center arm of R3. | (Exact adjustment requires a special dummy load). Next best is to adjust R3 per Table 6-5. This represents trip current across 126 ohms plus 0.4 V (the drop across meter). |
| 6.3 V Adj. HV Module | Used to set the filament voltage for the TWT | HV Module, upper PCB E5 and E6. Pos (+) lead to E6. Neg (-) lead to E5. | With HV OFF, read voltage and adjust for a reading of 6.36 Vdc. This allows for 60 mV drop in wiring. |

TWT ADJUSTMENT POINTS

TABLE 6-4

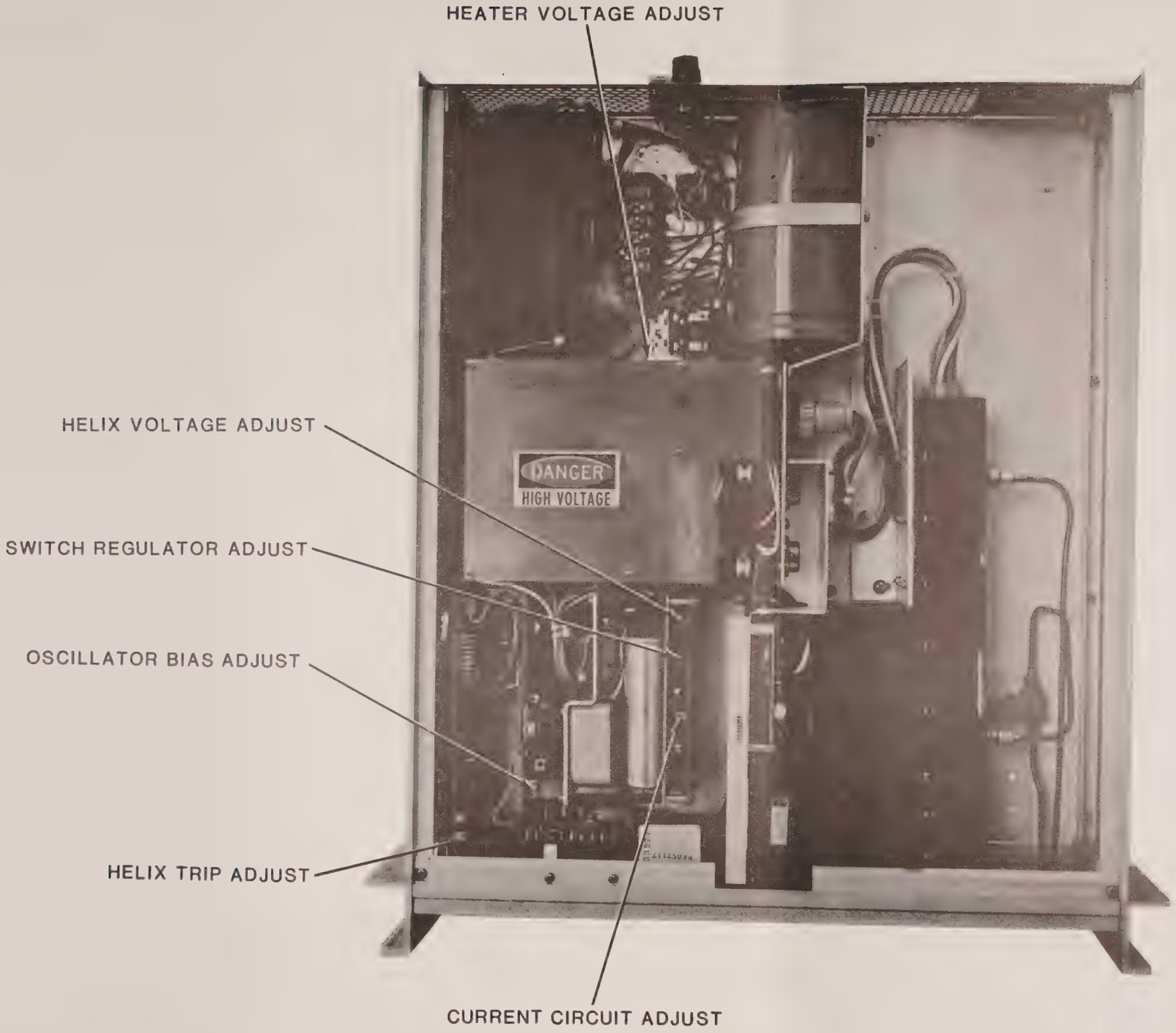


FIGURE 6-2
TWTA AND POWER SUPPLY ADJUSTMENTS

## 6.4.2 PARTS REPLACEMENT

### 6.4.2.1 TWT REPLACEMENT

The TWT is non-repairable and must be replaced if faulty. The following procedure should be followed for TWT replacement.

a. Remove prime power from the unit. Loosen the fittings on the input and output of the TWT.

b. Disconnect the TWT high voltage cable from the high voltage module.

c. Disconnect the two wires that go to the thermal switch mounted on the TWT heatsink.

d. Unscrew the TWT mounting bracket from the TWTA chassis and lift out the TWT assembly.

e. Remove the mounting bracket and the heatsink from the TWT.

f. Clean off all of the thermal compound from the mounting bracket and the heatsink. Apply new thermal compound liberally to the heatsink and the mounting bracket.

g. Reinstall the TWT by reversing the procedure above.

Be sure that all screws are tight for the heatsink and the mounting bracket and that there is a liberal amount of thermal compound applied.

### 6.4.2.2 MODULE AND COMPONENT REPLACEMENT

The printed circuit boards, modules, RF components, and miscellaneous can be completely removed or replaced using simple assembly techniques.

Several cautions, however, should be noted:

a. Upon reassembly, all screws should be snug.

b. All components with thermal compound must be cleaned and new thermal compound liberally reapplied.

c. All solder connections must be secure.

d. All connections must be completely installed and properly seated.

## 6.5 TROUBLESHOOTING

Troubleshooting procedures for the TWTA are presented below in the form of charts that relate the symptoms to an assembly, schematic and probable cause.

| SYMPTOM | ASSEMBLY | SCHEMATIC | CHECK |
|---|---|---|---|
| 1. No Logo Lit | TWTA | D112867 | Check polarity of input voltage Fuses F1 and F2. |
| | LED PWB | C113000 | Check for 48 Vdc from E8 to E6. |
| | | | Check for +10 Vdc across R5. |
| | Switch Regulator | D113244 | Check for 48 Vdc from E2 to E1. |
| | Oscillator Bias | D112840 | Check for +12 Vdc output of U2. |
| 2. No Time Delay | LED PWB | C113000 | Check for +10 Vdc across R4. |
| | Mother/Timer | C113031 | Check voltage U2-9, +12 Vdc at time delay over. |
| 3. No Standby | TWTA | | In time delay. A fault condition exists. |
| 4. No HV ON at Switch Command | | | Check 1 above. |
| | | | Check collector voltage approximately 2000 Vdc. |
| | | | Check helix voltage approximately 3200 Vdc. |
| | HV Converter | C112832 | Check for 20 KHz 33 Vdc square wave from the collector of Q5 to the collector of Q6. |
| | Switching Regulator | D113244 | Check for 33 Vdc across C1 of the switching regulator. |
| | | | Check for 40 KHz square wave across the switch regulator transistor Q1. |
| | Oscillator Bias | D112840 | Check for 40 KHz square wave across the collector of Q4 and Q5. |
| | Control Logic | E112836 | Check for near zero volts at U5-1, a 1 indicates a fault condition exists. |

| | SYMPTOM | ASSEMBLY | SCHEMATIC | CHECK |
|---|---|---|---|---|
| 5. | Fault | Control Logic | E112836 | Determine the particular fault by checking for a low voltage (0 2V) on the following:<br>U4-13<br>U4-9<br>U4-10<br>U4-1<br>U1-10<br>U1-9 |
| 6. | Helix Current Fault | Control Logic | E112836 | Determine if the helix current trip point is set too low. Follow the procedure outlined in the adjustment sections. |
| | | High Voltage Module | D113101 | Monitor the amplitude of the helix current fault with a current probe around the helix lead to the TWT Pin B of J1. |
| 7. | Internal Interlock Fault | Control Logic | E112876 | Check the operation of the interlock switch. |
| 8. | TWT Overtemperature | LED PWB TWTA | | Check for fan operation.<br>Check 29 Vdc from E1 to E2.<br>Check for blocked air intake or air exhaust.<br>Check for faulty thermal switch.<br>Check for blocked or dirt buildup in the air passages. |
| 9. | Current Limit | Switching Regulator | D113244 | The current limiter will operate any time that there is a short on the output of the switching regulator.<br>Check 4 above. |

| | SYMPTOM | ASSEMBLY | SCHEMATIC | CHECK |
|---|---|---|---|---|
| 10. | Filament Voltate | HV Module | D113101 | Check for 10 Vdc across C1. |
| | | | C112831 | Check for 6.3 Vdc from E5 to E6 |
| 11. | No RF Output | TWTA | | Check to see that the Gain control is adjusted fully clockwise. |
| | | | | Check for proper RF drive power. |
| | | | | Check for voltages applied to the TWT per 4 and 8 above. |
| | | | | Check for damaged or broken wires to TWT. |
| | | | | Check the fittings for a tight connection. |
| | | | | Check the termination in the output and input isolators for discoloration indicating excessive power or VSWR's. |
| | | | | Check the load VSWR. |
| | | | | Change the TWT. |

## 6.6 VOLTAGE MEASUREMENT

Figure 6-3 depicts the TWT and support power supply interconnection. The major supplies are the filament, helix and the collector supply. The theory of operation section of this manual contains a complete description of each of these three supplies. This section will discuss their interconnection and the typical measurement methods. All voltages referred to in this discussion will be approximate, refer to the specific TWT nameplate of each amplifier for the exact operating voltages.

The preferred voltmeter for each of these supplies is a multi-meter with a rating of approximately 5 to 6 kV. The leads must be high voltage type. The meter must float above ground, i.e., it must be physically isolated from ground.

Helix Voltage: The helix supply provides approximately +3000 Vdc from helix (ground) to cathode (-3000 Vdc). Clip the plus (+) lead of the voltmeter to ground and the minus (-) lead to cathode.

Filament Voltage: The filament supply provides approximately six volts dc to the heater of the TWT. The supply is referenced to the cathode (+) and the heater (-). CAUTION: With HV ON the filament supply floats at the helix potential (3000 Vdc). Measurements should be made with the Beam ON/Operate switch in the OFF position.

Connect the plus (+) lead of the meter to the cathode terminal and the minus (-) lead to the heater terminal. Turn main power switch ON and heater voltage (approximately 6 Vdc) with Beam ON/Operate switch OFF. The heater voltage will come on somewhat low and increase to full value in approximately 2 minutes.

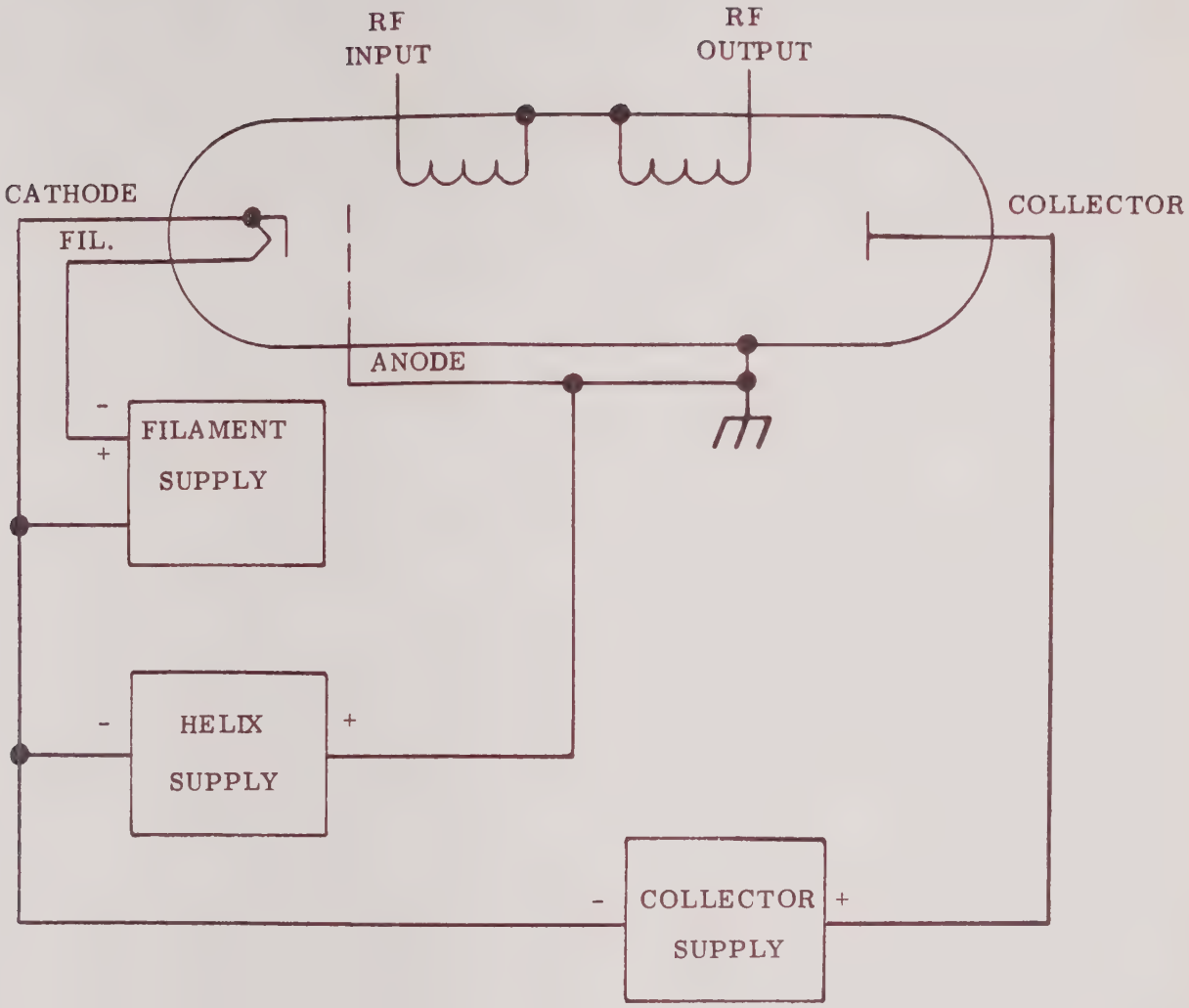
RF
INPUT
RF
OUTPUT
CATHODE
FIL.
COLLECTOR
ANODE
-
+
FILAMENT
SUPPLY
-
HELIX
SUPPLY
+
-
COLLECTOR
SUPPLY
+

FIGURE 6- 3

Collector Voltage: The collector supply provides the beam operating voltage for the TWT. It is referenced from collector (+) to cathode (-). (CAUTION: The cathode of the TWT also rides at -3000 Vdc from the helix supply). The collector supply provides approximately +2000 Vdc to the collector of the TWT as referenced to the cathode. This voltage is unregulated and is used to dispose of beam electrons after use. There are two methods of measuring the collector supply.

1. Connect the plus (+) lead of the test meter to the collector and the minus (-) lead to the cathode terminal. This method reads the collector voltage directly, approximately 2000 Vdc.

2. Connect the plus (+) lead of the test meter to ground and the minus (-) lead to the collector. This method will measure approximately 1500 Vdc. This is the voltage difference between the helix voltage measured above and the collector voltage.

Collector volts = helix volts - collector to ground volts.

CAUTION

WHEN MAKING ABOVE MEASUREMENTS, BE SURE TO USE A 5000 VOLT OR GREATER METER THAT FLOATS ABOVE GROUND. USE HIGH VOLTAGE LEADS AND DO NOT TOUCH THE METER WHILE MAKING MEASUREMENTS.

TABLE 6-5

HELIX TRIP POINT CURRENTS AND VOLTAGES

| TWTA Type | Trip Point Current (mA) | Trip Point Voltage (Vdc) |
|---|---|---|
| 6948 Series | 60 | 6.4 |
| 6958G1,G2 | 55 | 5.9 |
| 6958G3 | 75 | 7.9 |
| 6968 Series | 35 | 3.9 |
| 6978 Series | 40 | 4.4 |
| 6988 Series | 40 | 4.4 |
| 6998 Series | 30 | 3.4 |
| 6950 Series | 12 | 3.0 |
| 6960 Series | 12 | 3.0 |
| 6970 Series | 12 | 3.0 |
| 6980 Series | 12 | 3.0 |
| 6990 Series | 8 | 2.1 |
| 6941 Series | 17 | 4.1 |
| 6951 Series | 12 | 3.0 |
| 6961 Series | 12 | 3.0 |
| 6971 Series | 12 | 3.0 |
| 6981 Series | 12 | 3.0 |
| 6991 Series | 12 | 3.0 |

## SECTION 7

## DRAWINGS AND SCHEMATICS

| | | |
|---|---|---|
| UD1 | TWT AMPLIFIER | C129830-54 |
| | OVERALL SCHEMATIC | J112848 |
| | OUTLINE | D112849 |
| | INTERCONNECTION DIAGRAM | D112867 |
| | STD RACK ASSY KIT | D/LM 129825 |
| 1A1 | POWER SUPPLY DECK | D/LM 112822 |
| | WIRING DIAGRAM | D113631 |
| 1A1A1 | H.V. POWER SUPPLY | D/LM 113094 |
| | SCHEMATIC | D113101 |
| 1A1A1A1 | H.V. PCB, BOTTOM ASSEMBLY DWG. | C/LM 112827 |
| 1A1A1A2 | H.V. PCB, TOP | C/LM 112831 |
| 1A1A1A3 | CONVERTER PCB | C/LM 112835 |
| | SCHEMATIC | C112832 |
| 1A1A2 | LOGIC PCB | C/LM 112839 |
| | SCHEMATIC | E112836 |
| 1A1A3 | OSC/BIAS PCB | C/LM 112843 |
| | SCHEMATIC | D112840 |
| 1A1A4 | SWITCH REGULATOR ASSEMBLY | C/LM 113015 |
| | SCHEMATIC | D113244 |
| 1A1A4A1 | SWITCHING REG. PCB #1 | C/LM 112847 |
| | SCHEMATIC | D112844 |
| 1A1A4A2 | SWITCHING REG. PCB #2 | C/LM 112976 |
| | SCHEMATIC | C112973 |

| | | |
|---|---|---|
| 1A1A5 | MOTHER/TIMER PCB | C/LM 113034 |
| | SCHEMATIC | C113031 |
| 1A1A6 | LED PCB | C/LM 113003 |
| | SCHEMATIC | C113000 |
| | SCHEMATIC | C112866 |
| 1A3 | EXTENDER PCB | C/LM 113055 |
| 1A4 | GRID/ANODE PCB ASSEMBLY | C/LM 112855 |
| | SCHEMATIC | C112852 |
| 1A5 | FAULT/RECYCLE/IND PCB | C/LM 112859 |
| | SCHEMATIC | E112836 |
| 1A6 | REMOTE CONTROL PCB | C/LM 112863 |
| | SCHEMATIC | C112860 |

| | REF DES | DESCRIPTION | VARIAN PART NO. | MFG | VARIAN PART NO. | QTY |
|---|---|---|---|---|---|---|
| 1 | | POWER SUPPLY | D112[illegible]-02 | | | 1 |
| 2 | | STANDARD RACK ASSY KIT | D129825-00 | | | 1 |
| 3 | | SHIP KIT | B113641-02 | | | 1 |
| 4 | R11 | RESISTOR, VARIABLE, 10M, 20% | 36-885340 | TRW/IRC | HVC-106-20 | 1 |
| 5 | | WIRE LIST, TWT TO CONNECTOR | WL-133363-00 | | | [illegible] |
| 6 | | TWT | VTH-6079-H1 | VARIAN | | 1 |
| 7 | | FRONT PANEL, RIGHT | C129086-00 | | | 1 |
| 8 | | PLATE, REAR | C113822-00 | | | 1 |
| 9 | | REMOTE CONTROL OPTION | 129672 | | | 1 |
| 10 | | WIRE LIST, POST/STD ANODE | WL-129093-00 | | | [illegible] |
| 11 | | CABLE, SEMI-RIGID, .141 | 82-299901 | | | AR |
| 12 | | CONNECTOR, TYPE 'N', JACK | 58-180179 | | | 2 |
| 13 | M2 | ELAPSE TIME METER, 50HZ | 76-789814 | EMM CO. | T12D63B02 | 1 5 |
| 14 | | [illegible] ELAPSE TIME INDICATOR | [illegible]129014 | | | [illegible] |
| 15 | | CONNECTOR, TNC, PLUG | 58-180150 | | | 2 |
| 16 | E1 | TERMINAL, LUG | 16-139910 | | | 1 |
| 17 | | WIRE, 24 AWG, BLACK | 81-288700 | | | AR |
| 18 | | | | | | |
| 19 | | | | | | |

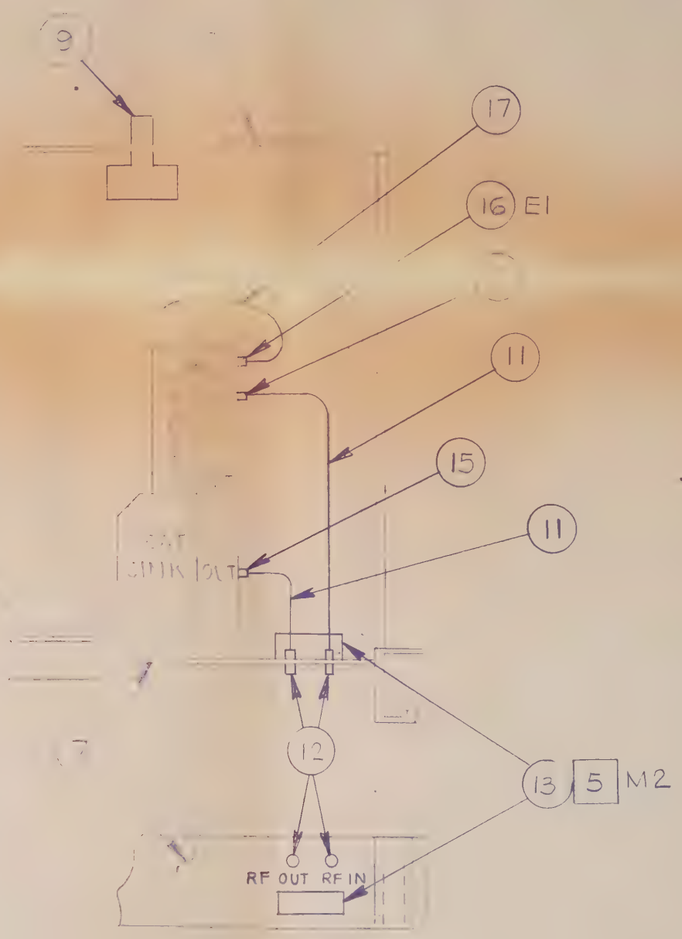


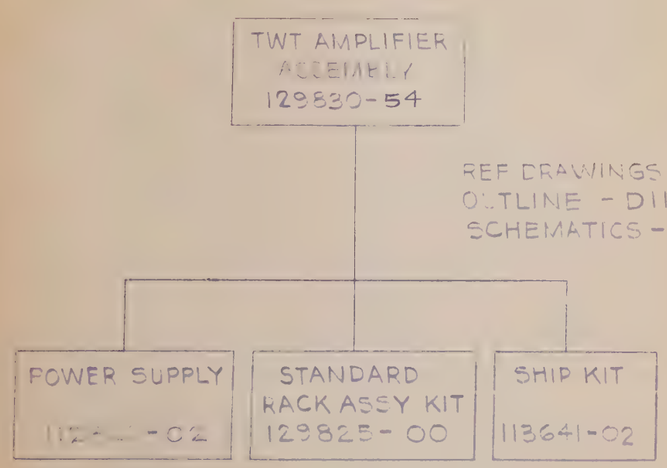


REF DRAWINGS
OUTLINE - D112849
SCHEMATICS - J112848

SPECIAL FINAL ASSY INSTRUCTIONS

1. WIRE GRID ANODE PCB PER WIRE LIST WL-129093-00.
2. ASSEMBLE RF SECTON OF AMPLIFIER AS INDICATED.
3. SEE STANDARD RACK ASSY KIT DWG 129825 FOR ADDITIONAL DETAILS.
4. WIRE FROM TWT TO CONNECTOR PER WIRE LIST WL-133363-00.

5 ELAPSE TIME METER IS CHOSEN TO MATCH CUSTOMER OPERATING FREQUENCY. REFER TO CUSTOMER SALES ORDER FOR OPERATING FREQUENCY.

NAME PLATE DATA

TWTA: VZH-6970-G4A
TWT: VTH-6079-H1
FREQ: 4-10 GHZ
GAIN: 35 dB

| CONTRACT NUMBER | | |
|---|---|---|
| DR | Tillie Evans | 1-19-79 |
| CHK | [illegible] | 22 Jan 79 |
| APPD | [illegible] | 1/22/79 |
| APPD | [illegible] | 1/24/79 |
| DESIGN ACTIVITY APPROVAL | | |
| CUSTOMER APPROVAL | | |

varian — MICROWAVE EQUIPMENT OPERATIONS, SANTA CLARA, CALIFORNIA

TWT AMPLIFIER ASSEMBLY & FAMILY TREE
VZH-6970-G4A

| SIZE | CODE IDENT NO. | |
|---|---|---|
| C | 99313 | 129830-54 |

SHEET

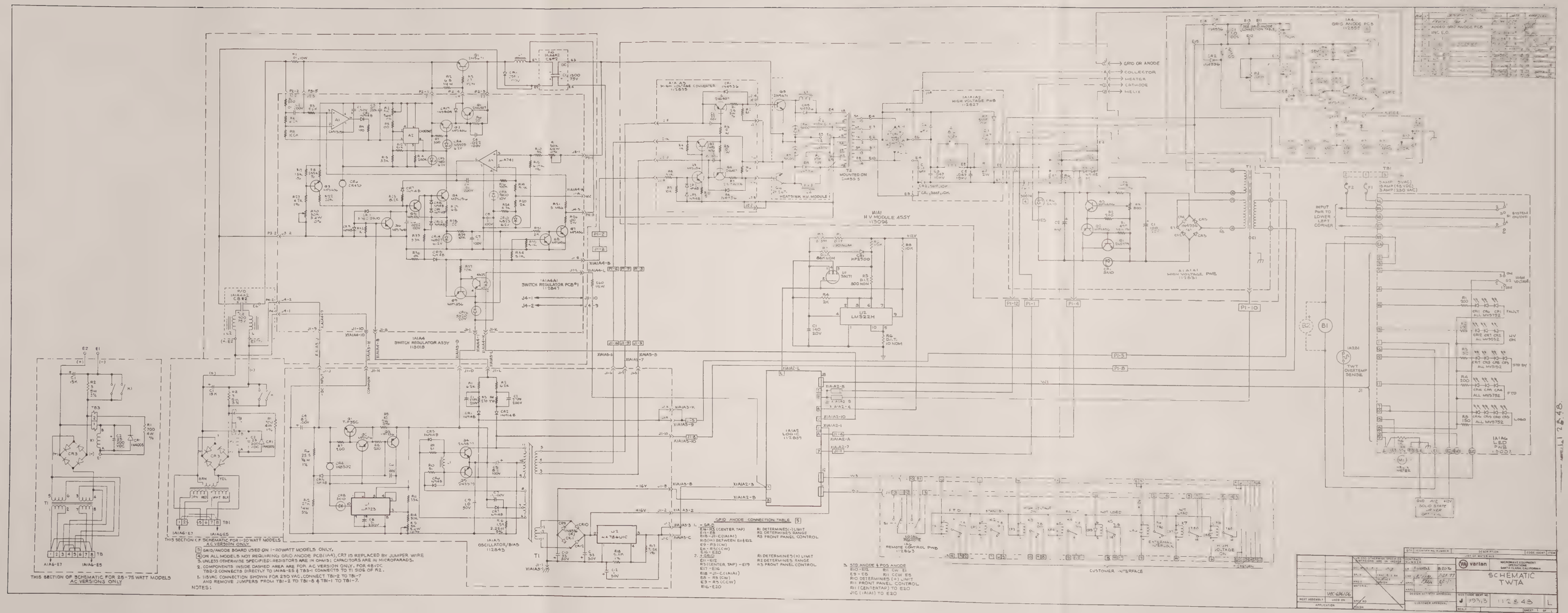
THIS SECTION OF SCHEMATIC FOR 25-75 WATT MODELS AC VERSIONS ONLY
THIS SECTION OF SCHEMATIC FOR 1-20 WATT MODELS AC VERSION ONLY
NOTES:
5 GRID/ANODE BOARD USED ON 1-20WATT MODELS ONLY.
4 ON ALL MODELS NOT REQUIRING GRID ANODE PCB(1A4), CR7 IS REPLACED BY JUMPER WIRE
3 UNLESS OTHERWISE SPECIFIED: RESISTORS ARE IN OHMS; CAPACITORS ARE IN MICROFARADS.
2. COMPONENTS INSIDE DASHED AREA ARE FOR AC VERSION ONLY. FOR 48VDC TB2-2 CONNECTS DIRECTLY TO 1A1A6-E5 & TB3-1 CONNECTS TO T1 SIDE OF R2.
1. 115VAC CONNECTION SHOWN FOR 230 VAC, CONNECT TB1-2 TO TB1-7 AND REMOVE JUMPERS FROM TB1-2 TO TB1-8 & TB1-1 TO TB1-7.
GRID ANODE CONNECTION TABLE 5
1. - GRID
E16-R5 (CENTER TAP)
E15-E8
E18-J1-C(1A1A1)
R15(H) BETWEEN E11 & E12
E9-R3(CW)
E8-R5(CCW)
E16-E20
2. + GRID
E11-E12
R5(CENTER TAP) - E19
E17-E16
E18-J1-C(1A1A1)
E8-R5 (CW)
E3-R5 (CCW)
E16-E20
R1 DETERMINES(-) LIMIT
R2 DETERMINES RANGE
R3 FRONT PANEL CONTROL
R1 DETERMINES(+) LIMIT
R2 DETERMINES RANGE
R3 FRONT PANEL CONTROL
3. STD ANODE & POS ANODE
E10-E12 R11 CW E1
E9-E8 R11 CCW E5
R10 DETERMINES (+) LIMIT
R11 FRONT PANEL CONTROL
R11 (CENTERTAP) TO E20
J1C (1A1A1) TO E20
1A1A1 H V MODULE ASSY 113096
1A1A2 HIGH VOLTAGE PWB 112827
1A1A3 OSCILLATOR/BIAS 112845
1A1A4 SWITCH REGULATOR ASSY 113015
1A1A4A1 SWITCH REGULATOR PCB 112847
1A1A5 LOGIC 112839
1A1A6 LED PWB 113002
1A4 GRID ANODE PCB 112855
1A1A1 HIGH VOLTAGE PWB 112831
1A1A3 HIGH VOLTAGE CONVERTER 112835
1A1A2 HIGH VOLTAGE PWB 112827
1A1A1 HIGH VOLTAGE PWB 112831
1A1A3 REMOTE CONTROL PWB 112863
1A1A6 SWITCH REGULATOR ASSY 113015
1A1A4A1 SWITCH REGULATOR PCB 112847
1A1A2 LOGIC 112839
1A1A3 OSCILLATOR/BIAS 112845
1A1A6 LED PWB 113002
1A4 GRID ANODE PCB 112855
GRID OR ANODE
COLLECTOR
HEATER
CATHODE
HELIX
HEATSINK H.V. MODULE
T2 MOUNTED ON LM335 S
INPUT PWR TO LOWER LEFT CORNER
TWT OVERTEMP SENSE
CUSTOMER INTERFACE
SCHEMATIC TWTA
varian
MICROWAVE EQUIPMENT OPERATIONS SANTA CLARA, CALIFORNIA
112848
L
SHEET 1 OF 1

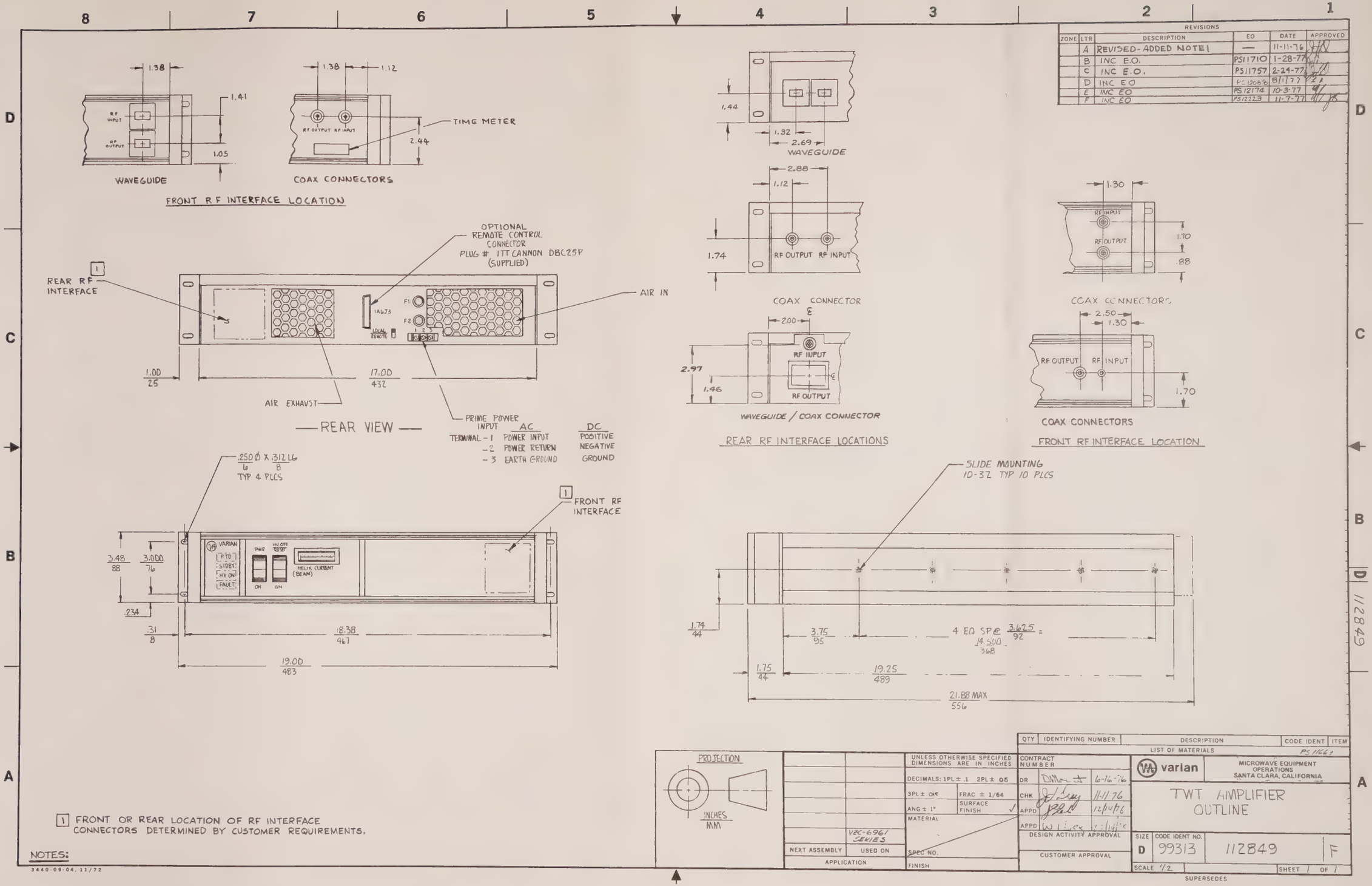

REVISIONS
ZONE | LTR | DESCRIPTION | EO | DATE | APPROVED
A | REVISED-ADDED NOTE 1 | — | 11-11-76
B | INC E.O. | PS11710 | 1-28-77
C | INC E.O. | PS11757 | 2-24-77
D | INC EO | PS12088 | 8/1/77
E | INC EO | PS12174 | 10-3-77
F | INC EO | PS12223 | 11-7-77
1.38
1.41
1.05
RF INPUT
RF OUTPUT
WAVEGUIDE
1.38
1.12
TIME METER
2.44
RF OUTPUT RF INPUT
COAX CONNECTORS
FRONT RF INTERFACE LOCATION
OPTIONAL REMOTE CONTROL CONNECTOR PLUG # ITT CANNON DBC25P (SUPPLIED)
REAR RF INTERFACE
AIR IN
1A673
F1
F2
LOCAL REMOTE
1.00 25
17.00 432
AIR EXHAUST
PRIME POWER INPUT
AC
DC
TERMINAL - 1 POWER INPUT POSITIVE
- 2 POWER RETURN NEGATIVE
- 3 EARTH GROUND GROUND
— REAR VIEW —
.250 Ø X .312 LG
6 8
TYP 4 PLCS
FRONT RF INTERFACE
VARIAN
FTD
STDBY
HV ON
FAULT
PWR
HV OFF RESET
ON
HELIX CURRENT (BEAM)
3.48 88
3.000 76
.234
.31 8
18.38 467
19.00 483
1.44
1.32
2.69
WAVEGUIDE
2.88
1.12
1.74
RF OUTPUT RF INPUT
COAX CONNECTOR
2.00
2.97
1.46
RF INPUT
RF OUTPUT
WAVEGUIDE / COAX CONNECTOR
REAR RF INTERFACE LOCATIONS
1.30
RF INPUT
RF OUTPUT
1.70
.88
COAX CONNECTORS
2.50
1.30
RF OUTPUT
RF INPUT
1.70
COAX CONNECTORS
FRONT RF INTERFACE LOCATION
SLIDE MOUNTING 10-32 TYP 10 PLCS
1.74 44
3.75 95
4 EQ SP @ 3.625 / 92 = 14.500 / 368
1.75 44
19.25 489
21.88 MAX 556
PROJECTION
INCHES
MM
VZC-6961 SERIES
NEXT ASSEMBLY
USED ON
APPLICATION
UNLESS OTHERWISE SPECIFIED DIMENSIONS ARE IN INCHES
DECIMALS: 1PL ± .1 2PL ± .05
3PL ± .015
FRAC ± 1/64
ANG ± 1°
SURFACE FINISH
MATERIAL
SPEC NO.
FINISH
QTY | IDENTIFYING NUMBER | DESCRIPTION | CODE IDENT | ITEM
LIST OF MATERIALS
PS11661
CONTRACT NUMBER
DR 6-16-76
CHK 11-11-76
APPD 12/14/76
APPD
DESIGN ACTIVITY APPROVAL
CUSTOMER APPROVAL
varian
MICROWAVE EQUIPMENT OPERATIONS SANTA CLARA, CALIFORNIA
TWT AMPLIFIER OUTLINE
SIZE D
CODE IDENT NO. 99313
112849
F
SCALE 1/2
SHEET 1 OF 1
SUPERSEDES
1 FRONT OR REAR LOCATION OF RF INTERFACE CONNECTORS DETERMINED BY CUSTOMER REQUIREMENTS.
NOTES:
3440-09-04, 11/72
112849

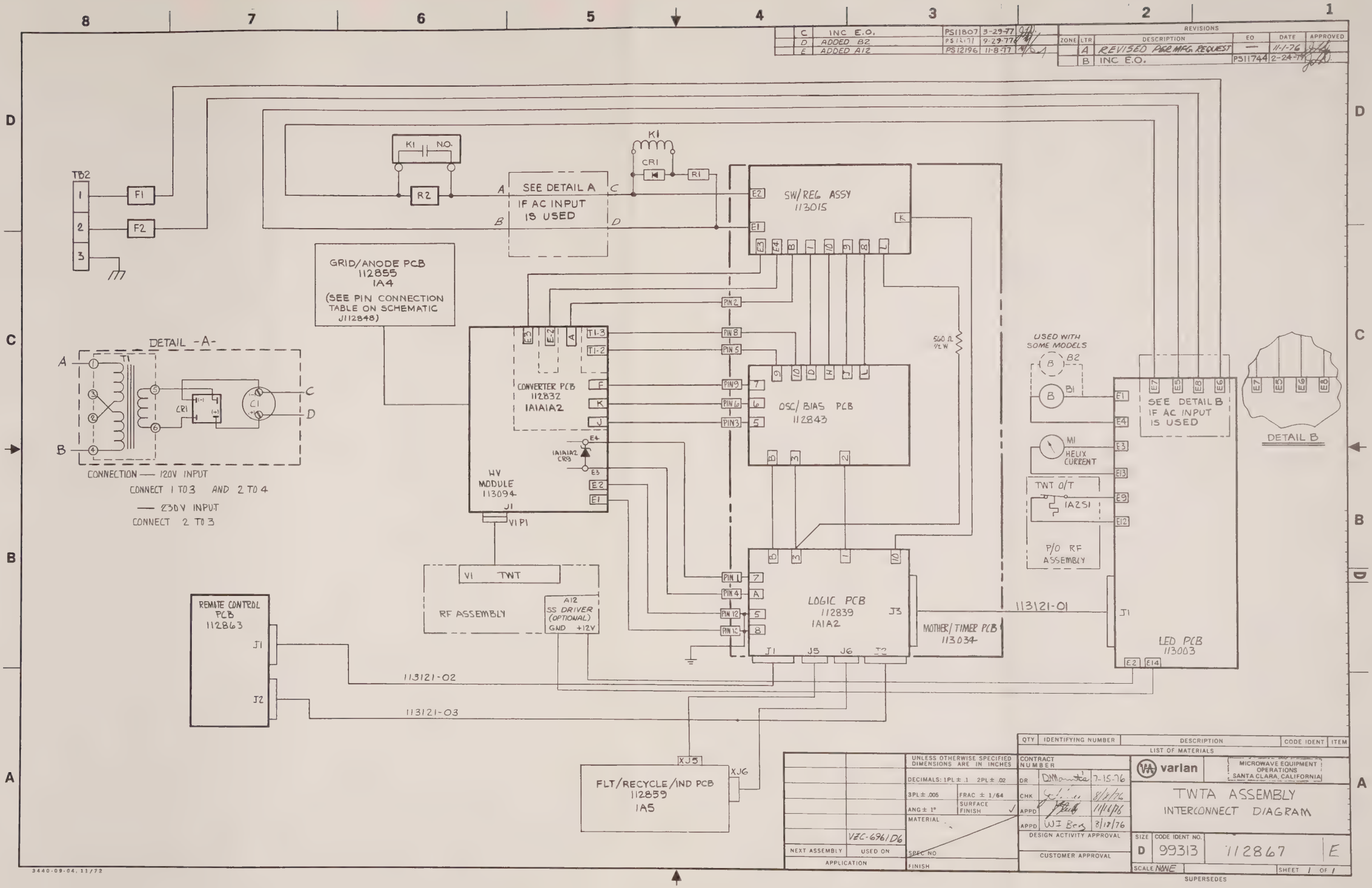

REVISIONS
ZONE LTR DESCRIPTION EO DATE APPROVED
A REVISED PER MFG. REQUEST — 11-1-76
B INC E.O. PS11744 2-24-79
C INC E.O. PS11807 3-29-77
D ADDED B2 PS12171 9-29-77
E ADDED A12 PS12196 11-8-77
TB2
F1
F2
K1 NO.
R2
K1
CR1
R1
SEE DETAIL A IF AC INPUT IS USED
SW/REG ASSY 113015
GRID/ANODE PCB 112855 1A4
(SEE PIN CONNECTION TABLE ON SCHEMATIC J112848)
DETAIL -A-
CONNECTION — 120V INPUT
CONNECT 1 TO 3 AND 2 TO 4
— 230V INPUT
CONNECT 2 TO 3
CONVERTER PCB 112832 1A1A1A2
HV MODULE 113094
OSC/BIAS PCB 112843
560 Ω 1/2 W
USED WITH SOME MODELS
B2
B1
M1 HELIX CURRENT
TWT O/T
1A2S1
P/O RF ASSEMBLY
SEE DETAIL B IF AC INPUT IS USED
DETAIL B
V1 TWT
RF ASSEMBLY
A12 SS DRIVER (OPTIONAL) GND +12V
LOGIC PCB 112839 1A1A2
MOTHER/TIMER PCB 113034
113121-01
LED PCB 113003
REMOTE CONTROL PCB 112863
113121-02
113121-03
FLT/RECYCLE/IND PCB 112859 1A5
XJ5
XJ6
QTY IDENTIFYING NUMBER DESCRIPTION CODE IDENT ITEM
LIST OF MATERIALS
UNLESS OTHERWISE SPECIFIED DIMENSIONS ARE IN INCHES
DECIMALS: 1PL ± .1 2PL ± .02
3PL ± .005 FRAC ± 1/64
ANG ± 1° SURFACE FINISH
MATERIAL
SPEC NO
FINISH
NEXT ASSEMBLY USED ON
VZC-6961D6
APPLICATION
CONTRACT NUMBER
DR 7-15-76
CHK 8/8/76
APPD 11/16/76
APPD 8/18/76
DESIGN ACTIVITY APPROVAL
CUSTOMER APPROVAL
varian
MICROWAVE EQUIPMENT OPERATIONS SANTA CLARA, CALIFORNIA
TWTA ASSEMBLY
INTERCONNECT DIAGRAM
SIZE D CODE IDENT NO. 99313 112867 E
SCALE NONE SHEET 1 OF 1
SUPERSEDES
3440-09-04, 11/72

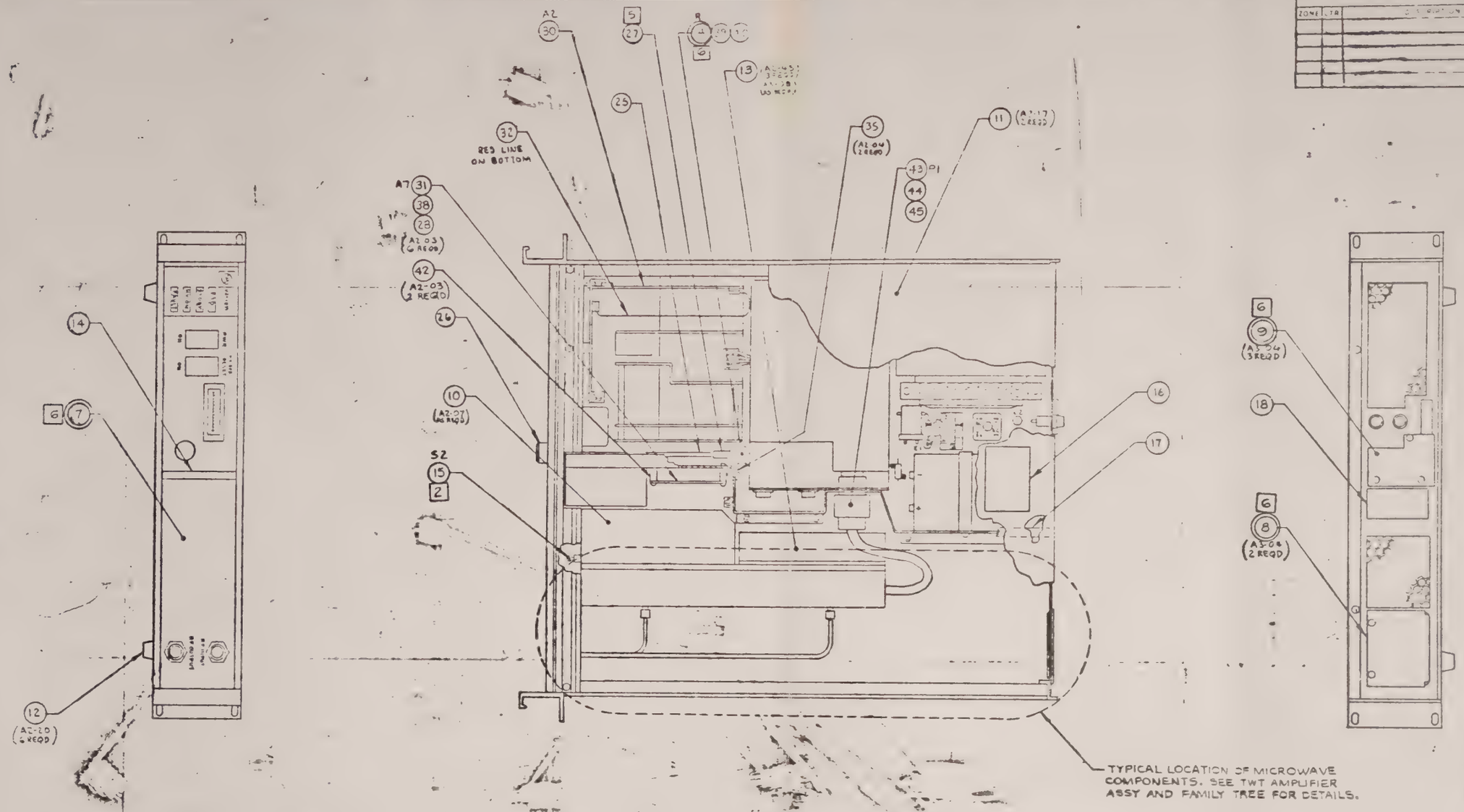


SEE SEPARATE LIST OF MATERIALS LM129825

6 FOR ITEMS IN DOUBLE CIRCLES SEE NEXT ASSY FOR PART NO. AND QUANTITY.

5 BOND ITEM 27 TO VARIABLE RESISTOR R11 WITH ITEM 33.

4 ASSEMBLE USING HARDWARE DWG C110625, EXAMPLE (A2-18 2 REQD)

3 ASSEMBLE PER VARIAN WORKMANSHIP STD 87-800-192

2 REFER TO WIRING DIAGRAM D113631 FOR S2 CONNECTION

1 INSTALL ITEM 17 ON TOP COVER (ITEM 11) TO FORM A SEAL [illegible] CENTER [illegible]

| QTY | IDENTIFYING NUMBER | DESCRIPTION | CODE IDENT |
|---|---|---|---|

varian

STANDARD RACK ASSY

KIT

D 99313 129825

varian | MICROWAVE EQUIPMENT OPERATIONS | TITLE: STANDARD RACK ASSY KIT | LM 129825

CODE IDENT NO: 99313 | APPROVAL | DATE

| APPLICATION | | | REVISION | | | | |
|---|---|---|---|---|---|---|---|
| NEXT ASSEMBLY | USED ON | EO | REV | DESCRIPTION | EO | DATE | APPROVED |
| | | R-106 | | | | | |
| | | | | | | | |
| | | | | | | | |

REVISION STATUS

| SHEET | | | | | | | | | | | | | | | | | | | | | | | | | | | |
|---|---|---|---|---|---|---|---|---|---|---|---|---|---|---|---|---|---|---|---|---|---|---|---|---|---|---|---|
| LTR | | | | | | | | | | | | | | | | | | | | | | | | | | | |
| SHEET | | | | | | | | | | | | | | | | | | | | | | | | | | | |
| LTR | | | | | | | | | | | | | | | | | | | | | | | | | | | |
| SHEET | | | | | | | | | | | | | | | | | | | | | | | | | | | |
| LTR | | | | | | | | | | | | | | | | | | | | | | | | | | | |

FORM 1758-01 375

| varian | MICROWAVE EQUIPMENT OPERATIONS | STANDARD RACK ASSY KIT | LM 129825 | |
|---|---|---|---|---|

| ITEM NO | REF DES | DESCRIPTION | VARIAN PART NO. | MFG | MFG OR MS PART NO. | QTY/DASH NO 00 | 01 | 02 | 03 |
|---|---|---|---|---|---|---|---|---|---|
| 1 | | | | | | | | | |
| 2 | | | | | | | | | |
| 3 | | | | | | | | | |
| 4 | R | RESISTOR, VARIABLE | SEE NEXT ASSY | | | ref | | | |
| 5 | | | | | | | | | |
| 6 | | | | | | | | | |
| 7 | | FRONT PANEL RIGHT | SEE NEXT ASSY | | | ref | | | |
| 8 | | PLATE, REAR | SEE NEXT ASSY | | | ref | | | |
| 9 | | PLATE, COVER | SEE NEXT ASSY | | | ref | | | |
| 10 | | HEATSINK | B112884-00 | | | 1 | | | |
| 11 | | COVER | C112890-00 | | | 1 | | | |
| 12 | | BAIL ASSY | B113808-48 | | | 1 | | | |
| 13 | | BRACKET, TUBE MTG. | D112879-00 | | | 1 | | | |
| 14 | | SPACER FRONT PANEL | A112882-00 | | | 1 | | | |
| 15 | S2 | SWITCH, THERMAL | 71-629908 | KLIXON | 3BTL6-45 | 1 | | | |
| 16 | | HV LABEL | B112379 | | | 1 | | | |
| 17 | | VINYL FOAM TAPE | 88-189801 | 3M | 4508 x 3" WIDE | 2½" | | | |
| 18 | | MODEL NO. LABEL | A113640 | | | 1 | | | |
| 19 | | | | | | | | | |
| 20 | | | | | | | | | |
| 21 | | | | | | | | | |

| varian | MICROWAVE EQUIPMENT OPERATIONS | STANDARD RACK ASSY KIT | LM 129825 |
|---|---|---|---|

| ITEM NO | REF DES | DESCRIPTION | VARIAN PART NO. | MFG | MFG OR MS PART NO. | QTY/DASH NO. | | | |
|---|---|---|---|---|---|---|---|---|---|
| | | | | | | 00 | 01 | | |
| 22 | | | | | | | | | |
| 23 | | | | | | | | | |
| 24 | | | | | | | | | |
| 25 | | SHAFT | B113820 | | | 1 | | | |
| 26 | | KNOB, ROUND | 23-508002 | RAYTHEON | D570-2BD-2 | 1 | | | |
| 27 | | COUPLING SHAFT | 20-258918 | H.H. SMITH | 140 | 1 | | | |
| 28 | | STANDOFF, HEX, #4-40 | 22-429769 | AMATOM | 8215-N-0440-0 | 3 | | | |
| 29 | | | | | | | | | |
| 30 | A2 | LOGIC PCB | C112839-00 | | | 1 | | | |
| 31 | A7 | ASSY, GRID/ANODE PCB | C112855 | | | 1 | | | |
| 32 | | CABLE ASSY | B113121-01 | | | 1 | | | |
| 33 | | EPOXY PATCH KIT | 88-298966 | HYSOL | 1 C WHITE | AR | | | |
| 34 | | | | | | | | | |
| 35 | | BRACKET, POT | B113819 | | | 1 | | | |
| 36 | | | | | | | | | |
| 37 | | | | | | | | | |
| 38 | | WIRE, H.V., WHT., 20 AWG | 81-259759 | | | AR | | | |
| 39 | | WIRE, H.V., GRY., 20 AWG | 81-259758 | | | AR | | | |
| 40 | | WIRE, H.V., YEL., 20 AWG | 81-259754 | | | AR | | | |
| 41 | | | | | | | | | |
| 42 | | STANDOFF, HEX, A1 4-40 | 22-429870-00 | | | 1 | | | |

| varian | MICROWAVE EQUIPMENT OPERATIONS | STANDARD RACK ASSY KIT | LM 129825 | REV |
|---|---|---|---|---|

| ITEM NO | REF DES | DESCRIPTION | VARIAN PART NO. | MFG | MFG OR MS PART NO. | QTY/DASH NO 00 | -01 | -02 | -03 |
|---|---|---|---|---|---|---|---|---|---|
| 43 | P1 | CONNECTOR, 6 PIN MALE | 51-109050 | WINCHESTER | PM6P | 1 | | | |
| 44 | | HOOD, CONNECTOR | 51-959950 | WINCHESTER | PM6H | 1 | | | |
| 45 | | SPRING, MALE CONNECTOR | 51-109057 | WINCHESTER | | 1 | | | |
| 46 | | | | | | | | | |
| 47 | | | | | | | | | |
| 48 | | | | | | | | | |
| 49 | | | | | | | | | |
| 50 | | | | | | | | | |
| 51 | | | | | | | | | |
| 52 | | | | | | | | | |
| 53 | | | | | | | | | |
| 54 | | | | | | | | | |
| 55 | | | | | | | | | |
| 56 | | | | | | | | | |
| 57 | | | | | | | | | |
| 58 | | | | | | | | | |
| 59 | | | | | | | | | |
| 60 | | | | | | | | | |
| 61 | | | | | | | | | |
| 62 | | | | | | | | | |
| 63 | | | | | | | | | |

| ZONE | LTR | REVISIONS DESCRIPTION | EO | DATE | APPROVED |
|---|---|---|---|---|---|
| | R | INC E.O. | PS12247 | 12-19-77 | |
| | S | INC E.O. | PS12284 | 12-19-77 | |
| | T | INC E.O. | PS12292 | 3-14-78 | |
| | U | INC E.O. | PS 2331 | 3-14-78 | |
| | V | INC E.O. | PS12420 | 3-14-78 | TE |
| | W | INC E.O. | PS1242? | 3-14-78 | TE |
| | Y | INC E.O. | PS12506 | 8-23-78 | TE |
| Z | | INC E.O. | PS12507 | | TE |
| AA | | INC E.O. | PS12534 | | TE |
| AB | | INC E.O. | PS12589 | | TE |
| AC | | INC E.O. | PS12694 | | TE |
| AD | | INC E.O. | PS12805 | | TE |
| AE | | INC E.O. | PS12862 | | |

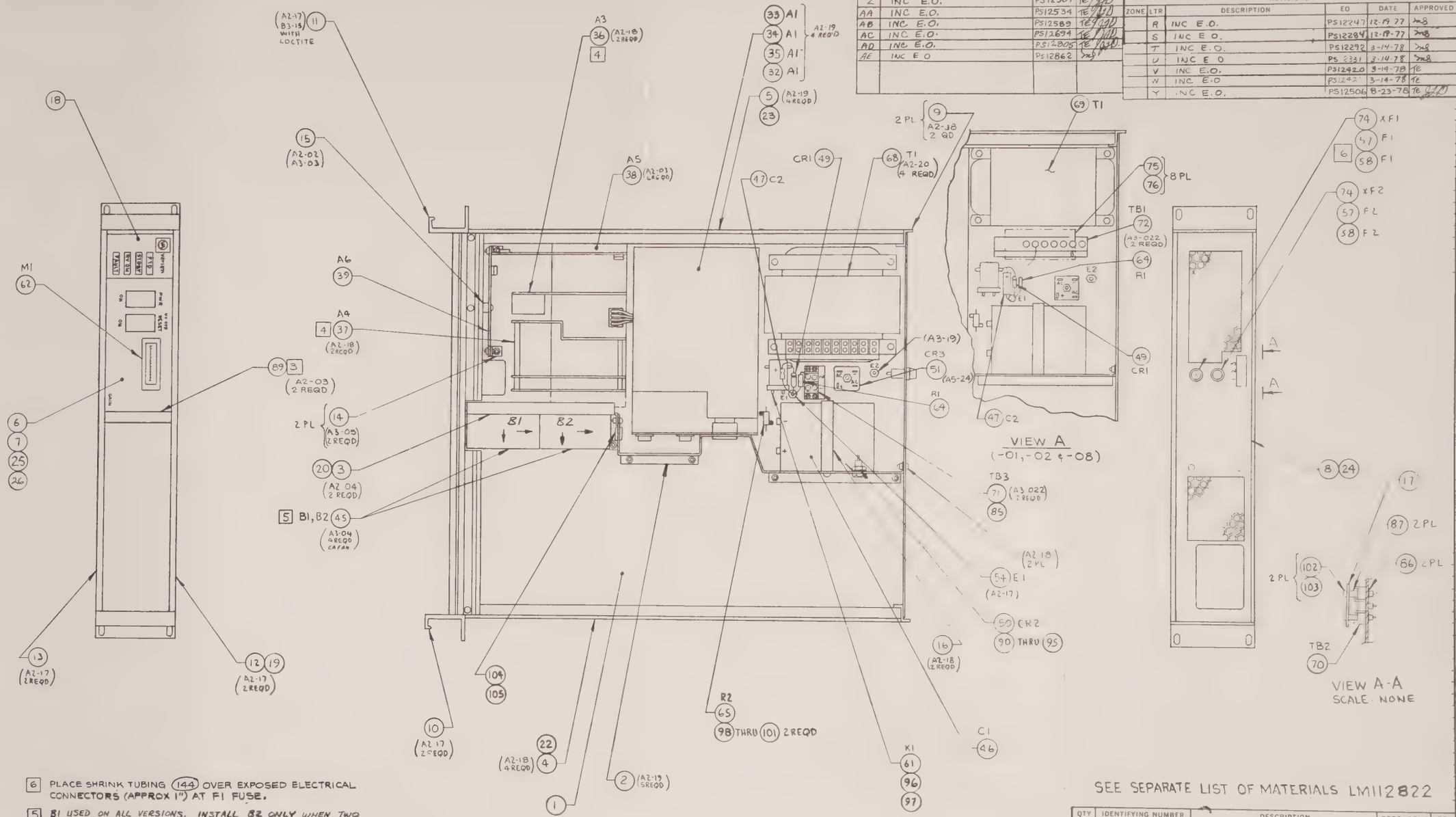


6 PLACE SHRINK TUBING (144) OVER EXPOSED ELECTRICAL CONNECTORS (APPROX 1") AT F1 FUSE.

5 B1 USED ON ALL VERSIONS. INSTALL B2 ONLY WHEN TWO BLOWERS ARE CALLED OUT.

4 APPLY THIN COAT OF THERMAL COMPOUND (ITEM 110) BETWEEN HEATSINK & CHASSIS.

3 INSTALL STANDOFF BETWEEN TOP & BOTTOM EXTRUSION.

2 ASSEMBLE USING HARDWARE DWG C110625, EXAMPLE (A2-18 2 REQD)

1. ASSEMBLE PER VARIAN WORKMANSHIP STD 87-800-299

NOTES:

SEE SEPARATE LIST OF MATERIALS LM112822

| QTY | IDENTIFYING NUMBER | DESCRIPTION | CODE IDENT | ITEM |
|---|---|---|---|---|
| | | LIST OF MATERIALS | | |

| | | |
|---|---|---|
| | | UNLESS OTHERWISE SPECIFIED DIMENSIONS ARE IN INCHES |
| | | DECIMALS: 1PL ± .1 2PL ± .02 |
| | | 3PL ± .005 FRAC ± 1 64 |
| E112850 | | ANG ± 1° SURFACE FINISH ✓ |
| D113812 | | MATERIAL |
| D113811 | | |
| NEXT ASSEMBLY | USED ON | SPEC NO. |
| APPLICATION | | FINISH |

| CONTRACT NUMBER | | |
|---|---|---|
| DR | L. Ando | 2/1/77 |
| CHK | | 3/7/77 |
| APPD | | 3/9/77 |
| APPD | W I Berg | 3/10/77 |
| DESIGN ACTIVITY APPROVAL | | |
| CUSTOMER APPROVAL | | |

varian — MICROWAVE EQUIPMENT OPERATIONS, SANTA CLARA, CALIFORNIA

# ASSEMBLY POWER SUPPLY DECK

| SIZE | CODE IDENT NO | |
|---|---|---|
| D | 99313 | 112822 AD |
| SCALE 1/2 | | SHEET 1 OF 1 |

SUPERSEDES

3440-09-04, 11/72

112822 D

| | | | | | | |
|---|---|---|---|---|---|---|
| varian | MICROWAVE EQUIPMENT OPERATIONS | TITLE: ASSY, POWER SUPPLY DECK | | | LM 112822 | REV AE |
| CODE IDENT NO 99313 | DR. DATE | CHK [illegible] DATE 3-7-77 | APPD W I Berg DATE 3/10/77 | APPD [illegible] DATE 3/1-/77 | | |

| APPLICATION | | | DASH Nº | AC | DC | 1 FAN | 2 FANS | GAIN | BRUSHED AL PUL | REAR SMA IN | LOW PWR |
|---|---|---|---|---|---|---|---|---|---|---|---|
| DASH NO | NEXT ASSEMBLY | MODEL NO | | | | | | | | | |
| -00 | E112850 | | -00 | – | X | X | – | – | – | – | – |
| -00 | | | -01 | X | – | X | – | – | – | – | – |
| -00 | | | -02 | X | – | X | – | X | – | – | – |
| -00 | | | -03 | – | X | X | – | X | – | – | – |
| | | | -04 | X | – | – | X | – | – | X | – |
| -01 | E112850 | | -05 | – | X | – | X | – | – | X | – |
| -01 | D113814 | | -06 | X | – | – | X | – | X | X | – |
| -01 | | | -07 | X | – | – | X | – | – | – | – |
| -01 | | | -08 | X | – | X | – | X | – | – | X |
| | | | -09 | – | X | – | X | – | – | X | – |
| -02 | D113814 | | | | | | | | | | |
| -02 | D113813 | | | | | | | | | | |
| -02 | D113812 | | | | | | | | | | |
| -02 | D113811 | | | | | | | | | | |
| | | | | | | | | | | | |
| -03 | | | | | | | | | | | |
| -03 | | | | | | | | | | | |
| -03 | | | | | | | | | | | |
| -03 | | | | | | | | | | | |
| | | | | | | | | | | | |
| -04 | D112850-02 | | | | | | | | | | |
| | | | | | | | | | | | |
| -05 | | | | | | | | | | | |
| | | | | | | | | | | | |
| -06 | D112850-05 | | | | | | | | | | |
| | | | | | | | | | | | |
| | | | | | | | | | | | |

REVISION

| REV | DESCRIPTION | EO | APPROVED | DATE |
|---|---|---|---|---|
| G | INC E.O | PS11791 | KR. | 5-4-77 |
| H | INC E.O.s PS11997 | PS 12039 PS 12055 | [illegible] | 7-15-77 |
| J | INC E.O. | PS 12067 | [illegible] | 7-18-77 |
| K | INC E.O. | PS12105 | [illegible] | 8-29-77 |
| L | INC EO PS12172, 12160, & 12173 | | [illegible] | 9-26-77 |
| M | INC EO | PS12177 | [illegible] | 10-6-77 |
| N | INC EO | PS12188 | [illegible] | 10-11-77 |
| P | INC EO | PS12193 | [illegible] | 11-7-77 |
| R | INC EO | PS12247 | [illegible] | 12-19-77 |
| S | INC EO | PS12284 | [illegible] | 12-19-77 |
| T | INC E.O. | PS12292 | [illegible] | 3-14-78 |
| U | INC E.O. | PS12331 | [illegible] | 3-14-78 |
| V | INC E.O. | PS12420 | [illegible] | 3-14-78 |
| W | INC E.O. | PS12421 | [illegible] | 3-14-78 |
| Y | INC E.O. | PS12506 | TE/JJD. | 3-23-78 |
| Z | INC E.O. | PS12507 | TE/JJD. | 3-23-78 |
| AA | INC E.O. | PS12534 | TE/JJD. | 3-23-78 |
| AB | INC E.O. | PS12585 | TE/JJD. | 3-23-78 |
| AC | INC E.O. | PS12694 | TE/JJD. | 3-23-78 |
| AD | INC E.O. | PS12805 | TE/JJD. | 3-23-78 |
| AE | INC E.O. | PS12862 | [illegible] | 11-7-78 |

varian | MICROWAVE EQUIPMENT OPERATIONS | ASSY, POWER SUPPLY DECK | LM 112822 | REV AE

| ITEM NO | REF DES | DESCRIPTION | VARIAN PART NO | MFG | MFG OR MS PART NO | 01 | 01 | 02 | 03 | 04 | 05 | 06 | 07 | 08 | 09 | 10 |
|---|---|---|---|---|---|---|---|---|---|---|---|---|---|---|---|---|
| 1 | | BASEPLATE | E112964-00 | | | 1 | 1 | 1 | 1 | 1 | 1 | 1 | 1 | - | 1 | |
| 2 | | BRACKET, SECTION DIVIDER | D112917-00 | | | 1 | 1 | 1 | 1 | 1 | 1 | 1 | 1 | 1 | 1 | |
| 3 | | BRACKET, PROP MOUNT | C112918-00 | | | 1 | 1 | 1 | 1 | - | - | - | - | 1 | - | |
| 4 | | PANEL, SIDE EXTRUSION-RIGHT | D112871-00 | | | 1 | 1 | 1 | 1 | - | - | - | - | 1 | - | |
| 5 | | PANEL, SIDE EXTRUSION-LEFT | D112871-01 | | | 1 | 1 | 1 | 1 | - | - | - | - | 1 | - | |
| 6 | | FRONT PANEL, LEFT | C112913-00 | | | 1 | 1 | - | - | 1 | 1 | - | 1 | - | 1 | |
| 7 | | FRONT PANEL, LEFT | C112913-02 | | | - | - | 1 | 1 | - | - | - | - | - | - | |
| 8 | | REAR PANEL | D112930-00 | | | 1 | 1 | 1 | 1 | - | - | - | 1 | 1 | - | |
| 9 | | REAR TRIM | B113808-13 | | | 1 PR | 1 PR | 1 PR | 1 PR | 1 PR | 1 PR | 1 PR | 1 PR | 1 PR | 1 PR | |
| 10 | | RACK MOUNT HANDLE, RIGHT | B113808-22 | | | 1 | 1 | 1 | 1 | 1 | 1 | 1 | 1 | 1 | 1 | |
| 11 | | RACK MOUNT HANDLE, LEFT | B113423 | | | 1 | 1 | 1 | 1 | 1 | 1 | 1 | 1 | 1 | 1 | |
| 12 | | FRONT TOP EXTRUSION | C113174-00 | | | 1 | 1 | 1 | 1 | - | - | - | - | 1 | - | |
| 13 | | FRONT BOTTOM EXTRUSION | B133039-02 | | | 1 | 1 | 1 | 1 | 1 | 1 | 1 | 1 | 1 | 1 | |
| 14 | | MOUNTING BRACKET, BOTTOM | A113558 | | | 2 | 2 | 2 | 2 | 2 | 2 | 2 | 2 | 2 | 2 | |
| 15 | | LED PCB SUPPORT BRACKET | A113557 | | | 1 | 1 | 1 | 1 | 1 | 1 | 1 | 1 | 1 | 1 | |
| 16 | | BRACKET, CAP STRAP | B113213 | | | - | 1 | 1 | - | 1 | - | 1 | 1 | 1 | - | |
| 17 | | SHIELD, TERMINAL BLOCK | A113648 | | | 1 | 1 | 1 | 1 | 1 | 1 | 1 | 1 | 1 | 1 | |
| 18 | | DECAL STATUS | B112914 | | | 1 | 1 | 1 | 1 | 1 | 1 | 1 | 1 | 1 | 1 | |
| 19 | | FRONT TOP EXTRUSION | C113174-01 | | | - | - | - | - | 1 | 1 | 1 | 1 | - | 1 | |
| 20 | | BRACKET, PROP MOUNT | C112918-01 | | | - | - | - | - | 1 | 1 | 1 | 1 | - | 1 | |
| 21 | | BASE PLATE | B129683 | | | - | - | - | - | - | - | - | - | 1 | - | |
| 22 | | PANEL, SIDE EXTRUSION-RIGHT | D129507-00 | | | - | - | - | - | 1 | 1 | 1 | 1 | | 1 | |
| 23 | | PANEL, SIDE EXTRUSION-LEFT | D129507-01 | | | - | - | - | - | 1 | 1 | 1 | 1 | - | 1 | |
| 24 | | REAR PANEL | D112930-01 | | | - | - | - | - | 1 | 1 | 1 | - | - | 1 | |
| 25 | | FRONT PANEL, LEFT | C112913-04 | | | - | - | - | - | - | - | 1 | - | - | - | |
| 26 | | FRONT PANEL, LEFT | C112913-03 | | | - | - | - | - | - | - | - | - | 1 | - | |
| 27 | | | | | | | | | | | | | | | | |
| 28 | | | | | | | | | | | | | | | | |

varian | MICROWAVE EQUIPMENT OPERATIONS | ASSY, POWER SUPPLY DECK | LM 112822 | REV A

| ITEM NO | REF DES | DESCRIPTION | VARIAN PART NO | MFG | MFG OR MS PART NO. | -01 | -01 | 02 | 03 | 04 | 05 | 06 | 07 | 08 | 09 | 10 | 11 | 12 | 13 | 14 | 15 | 16 | 17 | 18 | 19 | 20 | 21 | 22 | 23 | 24 | 25 | 26 | 27 | 28 | 29 |
|---|---|---|---|---|---|---|---|---|---|---|---|---|---|---|---|---|---|---|---|---|---|---|---|---|---|---|---|---|---|---|---|---|---|---|---|
| 29 | | | | | | | | | | | | | | | | | | | | | | | | | | | | | | | | | | | |
| 30 | | | | | | | | | | | | | | | | | | | | | | | | | | | | | | | | | | | |
| 31 | | | | | | | | | | | | | | | | | | | | | | | | | | | | | | | | | | | |
| 32 | A1 | H.V. MODULE | C129682 | | | - | - | - | - | - | - | - | - | 1 | - | | | | | | | | | | | | | | | | | | | | |
| 33 | A1 | H.V. MODULE | D113094-02 | | | - | - | 1 | 1 | - | - | - | - | - | - | | | | | | | | | | | | | | | | | | | | |
| 34 | A1 | H.V. MODULE | D113094-00 | | | 1 | 1 | - | - | - | - | - | - | - | 1 | | | | | | | | | | | | | | | | | | | | |
| 35 | A1 | H.V. MODULE | D113094-01 | | | - | - | - | - | 1 | 1 | 1 | 1 | - | - | | | | | | | | | | | | | | | | | | | | |
| 36 | A3 | OSC/BIAS PCB | C112843 | | | 1 | 1 | 1 | 1 | 1 | 1 | 1 | 1 | 1 | 1 | | | | | | | | | | | | | | | | | | | | |
| 37 | A4 | SWITCH/REG. ASSY | C113015 | | | 1 | 1 | 1 | 1 | 1 | 1 | 1 | 1 | 1 | 1 | | | | | | | | | | | | | | | | | | | | |
| 38 | A5 | MOTHER/TIMER PCB | C113034 | | | 1 | 1 | 1 | 1 | 1 | 1 | 1 | 1 | 1 | 1 | | | | | | | | | | | | | | | | | | | | |
| 39 | A6 | LED PCB | C113003 | | | 1 | 1 | 1 | 1 | 1 | 1 | 1 | 1 | 1 | 1 | | | | | | | | | | | | | | | | | | | | |
| 40 | | | | | | | | | | | | | | | | | | | | | | | | | | | | | | | | | | | |
| 41 | | | | | | | | | | | | | | | | | | | | | | | | | | | | | | | | | | | |
| 42 | | | | | | | | | | | | | | | | | | | | | | | | | | | | | | | | | | | |
| 43 | | | | | | | | | | | | | | | | | | | | | | | | | | | | | | | | | | | |
| 44 | | | | | | | | | | | | | | | | | | | | | | | | | | | | | | | | | | | |
| 45 | B1, B2 | FAN, 24VDC, 41 CFM AT Ø $H_2O$ | C113556 | PAMOTOR | 8110 | 1 | 1 | 1 | 1 | 2 | 2 | 2 | 2 | 1 | 2 | | | | | | | | | | | | | | | | | | | | |
| 46 | C1 | CAPACITOR 15000 µf, 1000WVDC | 41-549996 | SPRAGUE | 36DX153G-100DC-A2 | - | 1 | 1 | - | 1 | - | 1 | 1 | 1 | - | | | | | | | | | | | | | | | | | | | | |
| 47 | C2 | CAPACITOR, 25 µf, 100VDC | 41-506014 | | S-#500D256F100DH | 1 | 1 | 1 | 1 | 1 | 1 | 1 | 1 | 1 | 1 | | | | | | | | | | | | | | | | | | | | |
| 48 | | | | | | | | | | | | | | | | | | | | | | | | | | | | | | | | | | | |
| 49 | CR1 | DIODE | 66-396950 | | 1N4005 | 1 | 1 | 1 | 1 | 1 | 1 | 1 | 1 | 1 | 1 | | | | | | | | | | | | | | | | | | | | |
| 50 | CR2 | DIODE | 66-999700 | | 1N1190 | 1 | - | - | 1 | - | 1 | - | - | - | 1 | | | | | | | | | | | | | | | | | | | | |
| 51 | CR3 | DIODE ASSY | 66-230 614 | MOTOROLA | MDA 3502 | - | 1 | 1 | - | 1 | - | 1 | 1 | 1 | - | | | | | | | | | | | | | | | | | | | | |
| 52 | | | | | | | | | | | | | | | | | | | | | | | | | | | | | | | | | | | |
| 53 | | | | | | | | | | | | | | | | | | | | | | | | | | | | | | | | | | | |
| 54 | E1 | TERMINAL, INSULATED | 16-339937 | USECO | 753A | 1 | 1 | 1 | 1 | 1 | 1 | 1 | 1 | 1 | 1 | | | | | | | | | | | | | | | | | | | | |
| 55 | | | | | | | | | | | | | | | | | | | | | | | | | | | | | | | | | | | |
| 56 | | | | | | | | | | | | | | | | | | | | | | | | | | | | | | | | | | | |

varian | MICROWAVE EQUIPMENT OPERATIONS | ASSY, POWER SUPPLY DECK | LM 112822 | EV AE

| ITEM NO | REF DES | DESCRIPTION | VARIAN PART NO | MFG | MFG OR MS PART NO | QTY DASH NO. -00 | -01 | -02 | -03 | -04 | -05 | -06 | -07 | -08 | -09 | -10 | -11 | -12 | -13 | -14 | -15 | -16 | -17 | -18 | -19 | -20 | -21 | -22 | -23 | -24 | -25 | -26 | -27 | -28 | -29 |
|---|---|---|---|---|---|---|---|---|---|---|---|---|---|---|---|---|---|---|---|---|---|---|---|---|---|---|---|---|---|---|---|---|---|---|---|
| 57 | F1, F2 | FUSE, 5 AMP | 67-137450 | BUSSMAN | MDX5 | - | 2 | 2 | - | - | - | - | - | 2 | - | | | | | | | | | | | | | | | | | | | | |
| 58 | F1, F2 | FUSE, 15 AMP | 67-130515 | BUSSMAN | 4BC15 | 2 | - | - | 2 | - | 2 | - | - | - | 2 | | | | | | | | | | | | | | | | | | | | |
| 59 | F1, F2 | FUSE, 8 AMP | | BUSSMAN | MDA8 | - | - | - | - | 2 | - | 2 | 2 | - | - | | | | | | | | | | | | | | | | | | | | |
| 60 | M1 | METER 0-50 mA | 76-125803 | SIMPSON | 1521-6816 | - | - | - | - | - | - | - | - | 1 | - | | | | | | | | | | | | | | | | | | | | |
| 61 | K1 | RELAY 24VDC 10 AMP CONTACTS | 72-125961 | P&B | KA11DG-24VDC | 1 | 1 | 1 | 1 | 1 | 1 | 1 | 1 | 1 | 1 | | | | | | | | | | | | | | | | | | | | |
| 62 | M1 | METER, 0-15 mA | 057147 | | | 1 | 1 | 1 | 1 | 1 | 1 | 1 | 1 | - | 1 | | | | | | | | | | | | | | | | | | | | |
| 63 | R1 | RESISTOR, C.C. 470 OHM, 2W, 5% | 34-401347 | | | 1 | - | - | 1 | - | 1 | - | - | - | 1 | | | | | | | | | | | | | | | | | | | | |
| 64 | R1 | RESISTOR, W.W., 700 OHM, 4W, 1% | 31-549108 | DALE | G5 | - | 1 | 1 | - | 1 | - | 1 | 1 | 1 | - | | | | | | | | | | | | | | | | | | | | |
| 65 | R2 | RESISTOR, 3 OHM, 5W, 3% | 31-575104 | DALE | RH-5 | 1 | 1 | 1 | 1 | 1 | 1 | 1 | 1 | 1 | 1 | | | | | | | | | | | | | | | | | | | | |
| 66 | | | | | | | | | | | | | | | | | | | | | | | | | | | | | | | | | | | |
| 67 | | | | | | | | | | | | | | | | | | | | | | | | | | | | | | | | | | | |
| 68 | T1 | TRANSFORMER, INPUT, ASSY | C113614 | | | - | - | - | - | 1 | - | 1 | 1 | - | - | | | | | | | | | | | | | | | | | | | | |
| 69 | T1 | TRANSFORMER, INPUT, ASSY | C129585 | | | - | 1 | 1 | - | - | - | - | - | 1 | - | | | | | | | | | | | | | | | | | | | | |
| 70 | TB2 | TERMINAL BOARD | 56-189032 | CURTIS | GFTC-3 | 1 | 1 | 1 | 1 | 1 | 1 | 1 | 1 | 1 | 1 | | | | | | | | | | | | | | | | | | | | |
| 71 | TB3 | TERMINAL BOARD | 56-199821 | KULKA | 600A-2 | 1 | - | - | 1 | 1 | 1 | 1 | 1 | - | 1 | | | | | | | | | | | | | | | | | | | | |
| 72 | TB1 | TERMINAL BOARD | 56-198989 | KULKA | 599-8 | - | 1 | 1 | - | - | - | - | - | 1 | - | | | | | | | | | | | | | | | | | | | | |
| 73 | | | | | | | | | | | | | | | | | | | | | | | | | | | | | | | | | | | |
| 74 | XF1, 2 | HOLDER, FUSE | 55-198980 | LITTLEFUSE | 342028 | 2 | 2 | 2 | 2 | 2 | 2 | 2 | 2 | 2 | 2 | | | | | | | | | | | | | | | | | | | | |
| 75 | | QUICK DISCONNECT | 56-199757 | KULKA | KT29 | - | 8 | 8 | - | - | - | - | - | 8 | - | | | | | | | | | | | | | | | | | | | | |
| 76 | | QUICK DISCONNECT | 56-199758 | KULKA | KT30 | - | 8 | 8 | - | - | - | - | - | 8 | - | | | | | | | | | | | | | | | | | | | | |
| 77 | | | | | | | | | | | | | | | | | | | | | | | | | | | | | | | | | | | |
| 78 | | | | | | | | | | | | | | | | | | | | | | | | | | | | | | | | | | | |
| 79 | | | | | | | | | | | | | | | | | | | | | | | | | | | | | | | | | | | |
| 80 | | | | | | | | | | | | | | | | | | | | | | | | | | | | | | | | | | | |
| 81 | | | | | | | | | | | | | | | | | | | | | | | | | | | | | | | | | | | |
| 82 | | | | | | | | | | | | | | | | | | | | | | | | | | | | | | | | | | | |
| 83 | | | | | | | | | | | | | | | | | | | | | | | | | | | | | | | | | | | |
| 84 | | MARKER STRIP | 56-999473 | KULKA | MS590-8-1A | - | 1 | 1 | - | - | - | - | - | 1 | - | | | | | | | | | | | | | | | | | | | | |

varian | MICROWAVE EQUIPMENT OPERATIONS | ASSY, POWER SUPPLY DECK | LM 112822 | REV A E

| ITEM NO | REF DES | DESCRIPTION | VARIAN PART NO. | MFG | MFG OR MS PART NO | 00 | 01 | 02 | 03 | 04 | 05 | 06 | 07 | 08 | 09 | 10 | 11 | 12 | 13 | 14 | 15 | 16 | 17 | 18 | 19 | 20 | 21 | 22 | 23 | 24 | 25 | 26 | 27 | 28 | 29 |
|---|---|---|---|---|---|---|---|---|---|---|---|---|---|---|---|---|---|---|---|---|---|---|---|---|---|---|---|---|---|---|---|---|---|---|---|
| 85 | | MARKER STRIP | 56-999465 | KULKA | MS600A-2-1A | 1 | - | - | 1 | 1 | 1 | 1 | 1 | - | 1 | | | | | | | | | | | | | | | | | | | | |
| 86 | | FASTENER | 13-959986 | TINNERMAN | C9635-014-067 | 2 | 2 | 2 | 2 | 2 | 2 | 2 | 2 | 2 | 2 | | | | | | | | | | | | | | | | | | | | | |
| 87 | | STANDOFF, HEX, #6-32 | 22-429818 | AMATOM | 9737-SS-0632-0 | 2 | 2 | 2 | 2 | 2 | 2 | 2 | 2 | 2 | 2 | | | | | | | | | | | | | | | | | | | | | |
| 88 | | | | | | | | | | | | | | | | | | | | | | | | | | | | | | | | | | | |
| | | | | | | | | | | | | | | | | | | | | | | | | | | | | | | | | | | |
| | | | | | | | | | | | | | | | | | | | | | | | | | | | | | | | | | | |
| 89 | | 2 7/8" ALUM STANDOFF | B133109 | (MAKE FROM RAF 1715-440A) | | 1 | 1 | 1 | 1 | 1 | 1 | 1 | 1 | 1 | 1 | | | | | | | | | | | | | | | | | | | | | |
| 90 | | WASHER, MICA, #1/4 | 62-899003 | MOTOROLA | B52600-F001 | 1 | - | - | 1 | - | 1 | - | - | - | 1 | | | | | | | | | | | | | | | | | | | | | |
| 91 | | INSULATOR, TEFLON | 62-899918 | MOTOROLA | B51547F012 | 1 | - | - | 1 | - | 1 | - | - | - | 1 | | | | | | | | | | | | | | | | | | | | | |
| 92 | | WASHER, FLAT, 1/4 | 14-122014 | | | 1 | - | - | 1 | - | 1 | - | - | - | 1 | | | | | | | | | | | | | | | | | | | | | |
| 93 | | SOLDER LUG, 1/4 | 15-003491 | | | 1 | - | - | 1 | - | 1 | - | - | - | 1 | | | | | | | | | | | | | | | | | | | | | |
| 94 | | WASHER, LOCK, 1/4 | 14-302014 | | | 1 | - | - | 1 | - | 1 | - | - | - | 1 | | | | | | | | | | | | | | | | | | | | | |
| 95 | | NUT, 1/4 | 13-122064 | | | 1 | - | - | 1 | - | 1 | - | - | - | 1 | | | | | | | | | | | | | | | | | | | | | |
| 96 | | NUT, #6-32 | 13-102006 | | | 1 | 1 | 1 | 1 | 1 | 1 | 1 | 1 | 1 | 1 | | | | | | | | | | | | | | | | | | | | | |
| 97 | | WASHER, LOCK #6-32 | 14-202006 | | | 1 | 1 | 1 | 1 | 1 | 1 | 1 | 1 | 1 | 1 | | | | | | | | | | | | | | | | | | | | | |
| 98 | | SCREW, PAN HD, 2-56 x 3/8 | 12-222002-06 | | | 2 | 2 | 2 | 2 | 2 | 2 | 2 | 2 | 2 | 2 | | | | | | | | | | | | | | | | | | | | | |
| 99 | | WASHER, FLAT #2 | 14-112002 | | | 2 | 2 | 2 | 2 | 2 | 2 | 2 | 2 | 2 | 2 | | | | | | | | | | | | | | | | | | | | | |
| 100 | | WASHER, LOCK, SPLIT #2 | 14-202002 | | | 2 | 2 | 2 | 2 | 2 | 2 | 2 | 2 | 2 | 2 | | | | | | | | | | | | | | | | | | | | | |
| 101 | | NUT, HEX, #2-56 | 13-122002 | | | 2 | 2 | 2 | 2 | 2 | 2 | 2 | 2 | 2 | 2 | | | | | | | | | | | | | | | | | | | | | |
| 102 | | SCREW, NYLON, #6-32 x 1/4 | 12-900704 | | | 2 | 2 | 2 | 2 | 2 | 2 | 2 | 2 | 2 | 2 | | | | | | | | | | | | | | | | | | | | | |
| 103 | | WASHER, NYLON #6 | 14-999704 | | | 2 | 2 | 2 | 2 | 2 | 2 | 2 | 2 | 2 | 2 | | | | | | | | | | | | | | | | | | | | | |
| 104 | | GROMMET | 24-399970 | FED. SCREW | 1662 | - | - | 1 | 1 | - | - | - | - | 1 | - | | | | | | | | | | | | | | | | | | | | | |
| 105 | | CAP PLUG | 23-619912 | G.C. ELECTRONICS | 1714 | 1 | 1 | - | - | 1 | 1 | 1 | 1 | - | 1 | | | | | | | | | | | | | | | | | | | | | |
| 106 | | | | | | | | | | | | | | | | | | | | | | | | | | | | | | | | | | | |
| 107 | | | | | | | | | | | | | | | | | | | | | | | | | | | | | | | | | | | |
| 108 | | | | | | | | | | | | | | | | | | | | | | | | | | | | | | | | | | | |
| 109 | | | | | | | | | | | | | | | | | | | | | | | | | | | | | | | | | | | |
| 110 | | COMPOUND, THERMAL | 88=298900 | WAKEFIELD | 120-8 | AR | AR | AR | AR | AR | AR | AR | AR | AR | AR | | | | | | | | | | | | | | | | | | | | | |

varian | MICROWAVE EQUIPMENT OPERATIONS | ASSY, POWER SUPPLY DECK | LM 112822 | REV AE

| ITEM NO | REF DES | DESCRIPTION | VARIAN PART NO. | MFG | MFG OR MS PART NO. | QTY/CASH NO 00 | 01 | 02 | 03 | 04 | 05 | 06 | 07 | 08 | 09 | 10 | 11 | 12 | 13 | 14 | 15 | 16 | 17 | 18 | 19 | 20 | 21 | 22 | 23 | 24 | 25 | 26 | 27 | 28 | 29 |
|---|---|---|---|---|---|---|---|---|---|---|---|---|---|---|---|---|---|---|---|---|---|---|---|---|---|---|---|---|---|---|---|---|---|---|---|
| 111 | | LUG, INSULATED, RING, RED #6 | 15-607211 | AMP | 36149 | 17 | 18 | 18 | 17 | 18 | 17 | 18 | 18 | 18 | 17 | | | | | | | | | | | | | | | | | | | | |
| 112 | | LUG, INSULATED, RING, BLUE #8 | 15-604121 | AMP | 328527 | - | 12 | 12 | - | 12 | - | 12 | 12 | 12 | - | | | | | | | | | | | | | | | | | | | | |
| 113 | | LUG, INSULATED, RING, BLUE #10 | 15-604122 | AMP | 34161 | - | 4 | 4 | - | 4 | - | 4 | 4 | 4 | - | | | | | | | | | | | | | | | | | | | | |
| 114 | | TERMINAL, INSULATED, QUICK DISCONNECT 1/4 | 15-999902 | AMP | 42599-2 | - | 4 | 4 | - | 4 | - | 4 | 4 | 4 | - | | | | | | | | | | | | | | | | | | | | |
| 115 | | WIRE, TEF. INSUL., "EE", #16 AWG, GRY | 81-249988 | | | - | AR | AR | - | AR | - | AR | AR | - | - | | | | | | | | | | | | | | | | | | | | |
| 116 | | WIRE, TEF. INSUL., "EE", #16 AWG, BLU | 81-249986 | | | AR | AR | AR | AR | AR | AR | AR | AR | AR | AR | | | | | | | | | | | | | | | | | | | | |
| 117 | | WIRE, TEF. INSUL., "EE", #16 AWG, WHT | 81-249989 | | | AR | AR | AR | AR | AR | AR | AR | AR | AR | AR | | | | | | | | | | | | | | | | | | | | |
| 118 | | WIRE, TEF. INSUL., "EE", #16 AWG, BLK | 81-249980 | | | AR | AR | AR | AR | AR | AR | AR | AR | AR | AR | | | | | | | | | | | | | | | | | | | | |
| 119 | | WIRE, TEF. INSUL., "EE", #16 AWG, RED | 81-249982 | | | AR | AR | AR | AR | AR | AR | AR | AR | AR | AR | | | | | | | | | | | | | | | | | | | | |
| 120 | | WIRE, TEF. INSUL., "EE", #16 AWG, GRN | 81-249985 | | | AR | AR | AR | AR | AR | AR | AR | AR | AR | AR | | | | | | | | | | | | | | | | | | | | |
| 121 | | WIRE, TEF. INSUL., "EE", #16 AWG, YEL | 81-249984 | | | AR | AR | AR | AR | AR | AR | AR | AR | AR | AR | | | | | | | | | | | | | | | | | | | | |
| 122 | | WIRE TEF. INSUL., "EE", #16 AWG, VIO | 81-249987 | | | AR | AR | AR | AR | AR | AR | AR | AR | AR | AR | | | | | | | | | | | | | | | | | | | | |
| 123 | | WIRE, TEF. INSUL., "EE", #20 AWG, RED | 81-288827 | | | AR | AR | AR | AR | AR | AR | AR | AR | AR | AR | | | | | | | | | | | | | | | | | | | | |
| 124 | | WIRE, TEF. INSUL., "EE", #20 AWG, GRN | 81-288830 | | | AR | AR | AR | AR | AR | AR | AR | AR | AR | AR | | | | | | | | | | | | | | | | | | | | |
| 125 | | | | | | | | | | | | | | | | | | | | | | | | | | | | | | | | | | | |
| 126 | | | | | | | | | | | | | | | | | | | | | | | | | | | | | | | | | | | |
| 127 | | WIRE, BUS, BARE #20 AWG | 81-099920 | | | AR | AR | AR | AR | AR | AR | AR | AR | AR | AR | | | | | | | | | | | | | | | | | | | | |
| 128 | | SLEEVING, TEFLON | 88-489020 | | | AR | AR | AR | AR | AR | AR | AR | AR | AR | AR | | | | | | | | | | | | | | | | | | | | |
| 129 | | TERMINAL, INSULATED, QUICK DISCONNECT 3/16 | 15-999909 | AMP | 60972-2 | 2 | 2 | 2 | 2 | 2 | 2 | 2 | 2 | 2 | 2 | | | | | | | | | | | | | | | | | | | | |
| 130 | | | | | | | | | | | | | | | | | | | | | | | | | | | | | | | | | | | |
| 131 | | SCHEMATIC | J129704 | | | - | - | - | - | - | - | - | - | ref | - | | | | | | | | | | | | | | | | | | | | |
| 132 | | INTERCONNECT DIAGRAM | D129703 | | | - | - | - | - | - | - | - | - | ref | - | | | | | | | | | | | | | | | | | | | | |
| 133 | | WIRING DIAGRAM & HARNESS | D113631-03 | | | REF | - | - | REF | - | REF | - | - | - | REF | | | | | | | | | | | | | | | | | | | | |
| 134 | | SCHEMATIC | J112848 | | | REF | REF | REF | REF | REF | REF | REF | REF | - | REF | | | | | | | | | | | | | | | | | | | | |
| 135 | | INTERCONNECT DIAGRAM | D112867 | | | REF | REF | REF | REF | REF | REF | REF | REF | - | REF | | | | | | | | | | | | | | | | | | | | |
| 136 | | WIRING DIAGRAM & HARNESS | D113631-02 | | | - | - | - | - | REF | - | REF | REF | - | - | | | | | | | | | | | | | | | | | | | | |
| 137 | | WIRING DIAGRAM & HARNESS | D133122-00 | | | - | REF | REF | - | - | - | - | - | REF | - | | | | | | | | | | | | | | | | | | | | |
| 138 | | | | | | | | | | | | | | | | | | | | | | | | | | | | | | | | | | | |

varian | MICROWAVE EQUIPMENT OPERATIONS | ASSY, POWER SUPPLY DECK | LM 112822 | REV A E

| ITEM NO | REF DES | DESCRIPTION | VARIAN PART NO | MFG | MFG OR MS PART NO. | QTY/DASH NO -00 | -01 | -02 | -03 | -04 | -05 | -06 | -07 | -08 | -09 |
|---|---|---|---|---|---|---|---|---|---|---|---|---|---|---|---|
| 139 | | WIRE, TEF. INSUL., EE, #24 AWG RED/BLK | 81-288720 | | | AR | AR | AR | AR | AR | AR | AR | AR | AR | AR |
| 140 | | WIRE, TEF. INSUL., EE, #24 AWG. WHT/BLK | 81-288775 | | | AR | AR | AR | AR | AR | AR | AR | AR | AR | AR |
| 141 | | WIRE, TEF. INSUL., EE, #16 AWG. ORN | 81-249983 | | | AR | AR | AR | AR | AR | AR | AR | AR | AR | AR |
| 142 | | WIRE, TEF. INSUL., EE, #20 AWG. ORN | 81-288828 | | | - | AR | AR | - | AR | - | AR | AR | AR | AR |
| 143 | | WIRE, TEF. INSUL., EE, #20 AWG. WHT/GRN | 81-288845 | | | AR | AR | AR | AR | AR | AR | AR | AR | AR | AR |
| 144 | | BLK SHRINK TUBING | 88-488182 | | | AR | AR | AR | AR | AR | AR | AR | AR | AR | AR |

| REVISIONS | | | | | |
|---|---|---|---|---|---|
| ZONE | LTR | DESCRIPTION | EO | DATE | APPROVED |
| | D | REVISED & REDRWN / EO | PS12284 | 12-19-77 | |
| | E | REVISED: WIRE LIST, WIRE NO 13 & 19 WAS 5" & 5.5" | | 1-17-78 | [illegible] |
| | F | REVISED PER E O | PS12378 | 2-8 78 | [illegible] |
| | G | NC E.O. | PS12425 | 3-31-78 | [illegible] |
| | H | INC E.O. | PS12426 | 3 31-78 | [illegible] |
| | J | NC E.O. | PS12596 | 9-19-78 | [illegible] |
| | K | INC E.O. | PS12672 | 3-19-79 | [illegible] |

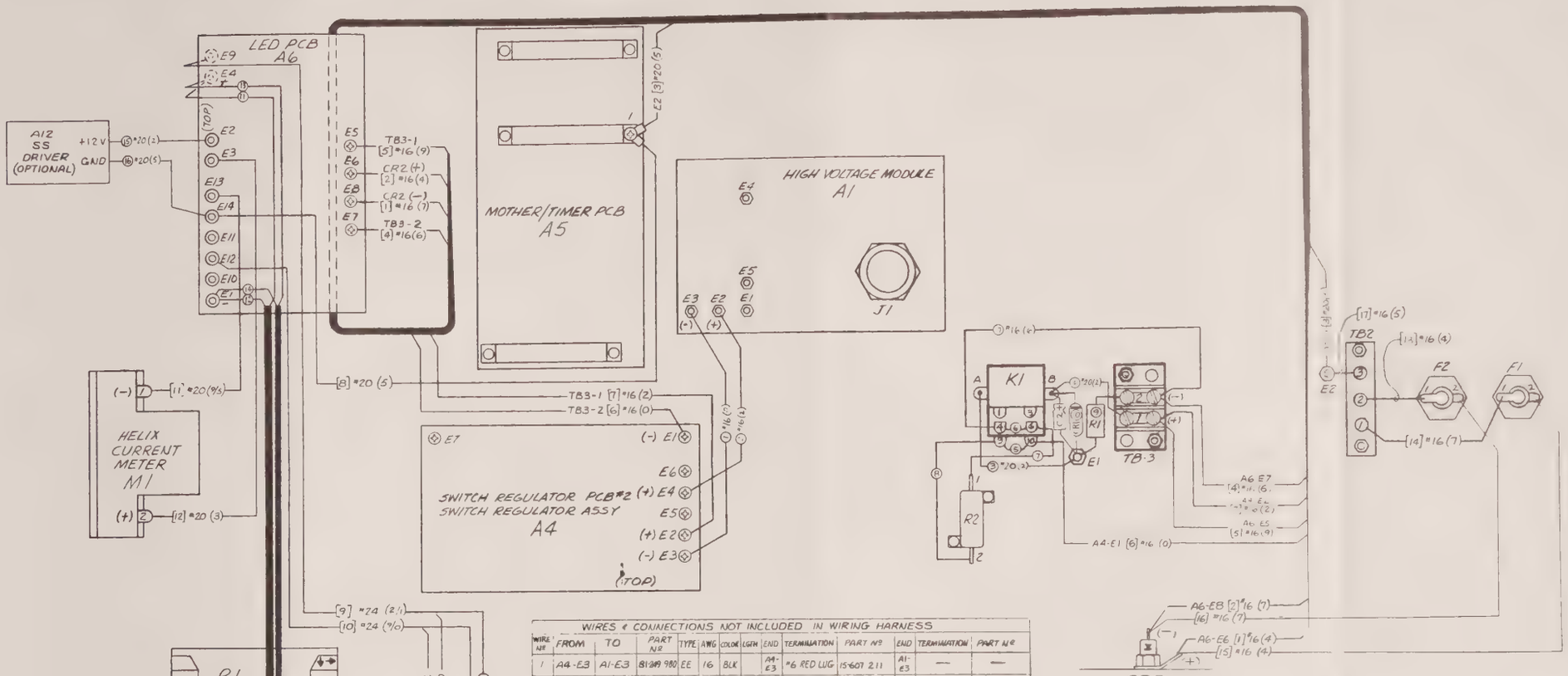


WIRES & CONNECTIONS NOT INCLUDED IN WIRING HARNESS

| WIRE Nº | FROM | TO | PART Nº | TYPE | AWG | COLOR | LGTH | END | TERMINATION | PART Nº | END | TERMINATION | PART Nº |
|---|---|---|---|---|---|---|---|---|---|---|---|---|---|
| 1 | A4-E3 | A1-E3 | 81-249 980 | EE | 16 | BLK | | A4-E3 | #6 RED LUG | 15-607 211 | A1-E3 | — | — |
| 2 | A4-E4 | A1-E2 | 81-249 982 | EE | 16 | RED | | A4-E4 | #6 RED LUG | 15-607 211 | A1-E2 | — | — |
| 3 | K1-A | E1 | 81-288 827 | EE | 20 | RED | | K1-A | — | — | E1 | — | — |
| 4 | K1-B | TB3-1 | 81-288 827 | EE | 20 | RED | | K1-B | — | — | TB3-1 | #6 RED LUG | 15-607 211 |
| 3 5 | K1-10 | K1-9 | 81-099 920 | BUS | 20 | — | | K1-10 | — | — | K1-9 | — | — |
| 3 6 | K1-6 | K1-4 | 81-099 920 | BUS | 20 | — | | K1-6 | — | — | K1-4 | — | — |
| 3 7 | K1-6 | R2-1 | 81-099 920 | BUS | 20 | — | | K1-6 | — | — | R2-1 | — | — |
| 3 8 | K1-9 | R2-2 | 81-099 920 | BUS | 20 | — | | K1-9 | — | — | R2-2 | — | — |
| 3 9 | E1 | TB3-2 | R1 | — | — | — | — | E1 | — | — | TB3-2 | #6 RED LUG | 15-607 211 |
| 3 10 | E1 | K1-B | CR1 | — | — | — | — | E1 | — | — | K1-B | — | — |
| 11 | B1(-) | A6-E1 | SUPPLIED WITH B1 | | | | | B1 (-) | — | — | A6-E1 | — | — |
| 12 | B1(+) | A6-E4 | " " " | | | | | B1 (+) | — | — | A6-E4 | — | — |
| 4 13 | B2(-) | A6-E1 | " " B2 | | | | | B2 (-) | — | — | A6-E1 | — | — |
| 4 14 | B2(+) | A6-E4 | " " " | | | | | B2 (+) | — | — | A6-E4 | — | — |
| 4 15 | A12(+12V) | A6-E2 | 81-288 827 | EE | 20 | RED | | A12 (+12V) | — | — | A6-E2 | — | — |
| 4 16 | A12 (GND) | A6-E14 | 81-288 850 | EE | 20 | GRN | | A12 (GND) | — | — | A6-E14 | — | — |
| 17 | K1-4 | TB3-2 | 81-249 986 | EE | 16 | BLU | | K1-4 | — | — | TB3-2 | #6 RED LUG | 15-607 211 |

| WIRE NO. | FROM | TO | PART NO. | END | TERMINATION | END | TERMINATION |
|---|---|---|---|---|---|---|---|
| 18 | K1-B | E1 | C2 | K1-B | C2 (+) | E1 | C2 (-) |

NOTES:
1. LEGEND –
   [ ] = WIRE Nº FROM "WIRE HARNESS" TABLE (SHEET 2)
   ○ = WIRE Nº FROM "WIRES NOT IN HARNESS" TABLE (SHEET 1)
   * = WIRE AWG SIZE
   ( ) = WIRE COLOR
2. REFERENCE DESIGNATIONS REFER TO ITEMS LISTED ON LM 112822 (EXCEPT J1-C, J1-D, S2, A12).
3. BARE WIRE REQUIRES SLEEVING, PART Nº 88-489 020.
4. OPTIONAL

| QTY | IDENTIFYING NUMBER | DESCRIPTION | CODE IDENT | ITEM |
|---|---|---|---|---|
| | | LIST OF MATERIALS | | |

| | | | |
|---|---|---|---|
| | | UNLESS OTHERWISE SPECIFIED DIMENSIONS ARE IN INCHES | CONTRACT NUMBER |
| | | DECIMALS: 1PL ± .1 2PL ± .02 | BR [illegible] 12-6-77 |
| | | 3PL ± .005 FRAC ± 1/64 | CHK |
| | | ANG ± 1° SURFACE FINISH ✓ | APPD [illegible] |
| | | MATERIAL | APPD [illegible] 2/5/79 |
| D112822 | | SPEC NO | DESIGN ACTIVITY APPROVAL |
| NEXT ASSEMBLY | USED ON | FINISH | CUSTOMER APPROVAL |
| APPLICATION | | | |

varian — MICROWAVE EQUIPMENT OPERATIONS, SANTA CLARA, CALIFORNIA

# WIRING DIAGRAM POWER SUPPLY DECK INTERCONNECTION (DC INPUT)

| SIZE | CODE IDENT NO | |
|---|---|---|
| D | 99313 | 113631-03 |

SCALE N/S | SHEET 1 OF 4

SUPERBEDES

113631

3440-09 04.11/72

| REVISIONS | | | | |
|---|---|---|---|---|
| ZONE | LTR | DESCRIPTION | EO | DATE | APPROVED |

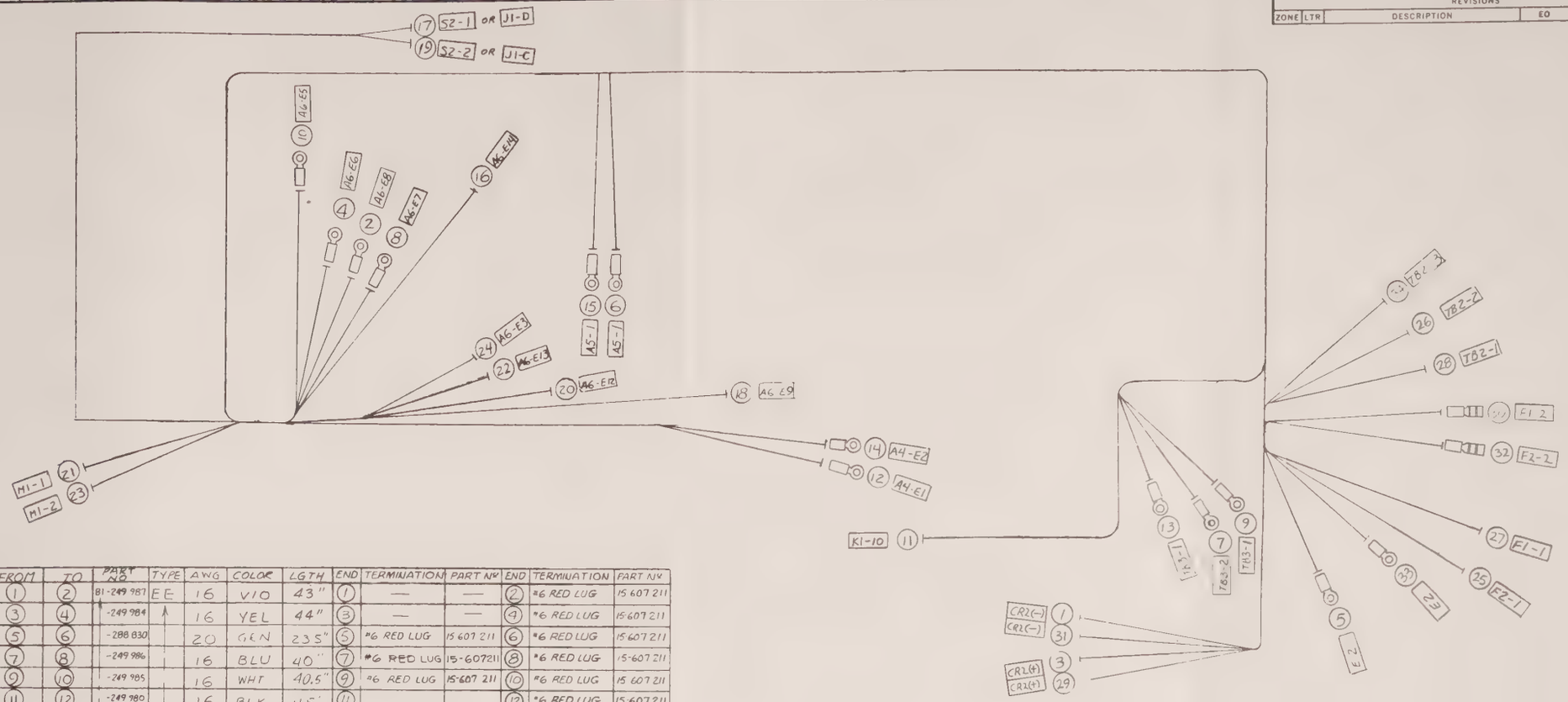


| WIRE NO | FROM | TO | FROM | TO | PART NO | TYPE | AWG | COLOR | LGTH | END | TERMINATION | PART Nº | END | TERMINATION | PART Nº |
|---|---|---|---|---|---|---|---|---|---|---|---|---|---|---|---|
| 1 | CR2(-) | A6-E8 | 1 | 2 | 81-249 987 | EE | 16 | VIO | 43" | 1 | — | — | 2 | #6 RED LUG | 15 607 211 |
| 2 | CR2(+) | A6-E6 | 3 | 4 | -249 984 | | 16 | YEL | 44" | 3 | — | — | 4 | #6 RED LUG | 15 607 211 |
| 3 | E2 | A5-1 | 5 | 6 | -288 830 | | 20 | GRN | 23.5" | 5 | #6 RED LUG | 15 607 211 | 6 | #6 RED LUG | 15 607 211 |
| 4 | TB3-2 | A6-E7 | 7 | 8 | -249 986 | | 16 | BLU | 40" | 7 | #6 RED LUG | 15-607211 | 8 | #6 RED LUG | 15-607 211 |
| 5 | TB3-1 | A6-E5 | 9 | 10 | -249 985 | | 16 | WHT | 40.5" | 9 | #6 RED LUG | 15-607 211 | 10 | #6 RED LUG | 15 607 211 |
| 6 | K1-10 | A4-E1 | 11 | 12 | -249 980 | | 16 | BLK | 45" | 11 | | | 12 | #6 RED LUG | 15-607 211 |
| 7 | TB3-1 | A4-E2 | 13 | 14 | -249 982 | | 16 | RED | 45" | 13 | #6 RED LUG | 15 607 211 | 14 | #6 RED LUG | 15-607 211 |
| 8 | A5-1 | A6-E14 | 15 | 16 | -288 830 | | 20 | GRN | 22.5" | 15 | #6 RED LUG | 15-607 211 | 16 | | — |
| 9 | S2-1 | A6-E9 | 17 | 18 | -288 720 | | 24 | RED/BLK | 24.5" | 17 | — | — | 18 | — | — |
| 10 | S2-2 | A6-E12 | 19 | 20 | -288 715 | | 24 | WHT/BLK | 21.5" | 19 | — | — | 20 | — | — |
| 11 | M1-1 | A6-E13 | 21 | 22 | -288 845 | | 20 | WHT/GRN | 7.5" | 21 | — | — | 22 | — | — |
| 12 | M1-2 | A6-E3 | 23 | 24 | -288 828 | | 20 | ORANGE | 7.5" | 23 | — | — | 24 | — | — |
| 13 | F2-1 | TB2-2 | 25 | 26 | -249 984 | | 16 | YEL | 7.5" | 25 | — | — | 26 | — | — |
| 14 | F1-1 | TB2-1 | 27 | 28 | -249 987 | | 16 | VIO | 7.5" | 27 | — | — | 28 | — | — |
| 15 | CR2(+) | F1-2 | 29 | 30 | -249 984 | | 16 | YEL | 10" | 29 | — | — | 30 | QUICK 3/16 DISCONNECT | 15-999 909 |
| 16 | CR2(-) | F2-1 | 31 | 32 | -249 987 | | 16 | VIO | 10" | 31 | — | — | 32 | QUICK 3/16 DISCONNECT | 15-999 909 |
| 17 | E2 | TB2-3 | 33 | 34 | -249 985 | EE | 16 | GRN | 6" | 33 | #6 RED LUG | 15-607 211 | 34 | — | — |
| 18 | | | 35 | 36 | | | | | | 35 | | | 36 | | |

NOTE:

○ = INFORMATION USED IN HARNESS STATION

▭ = INFORMATION USED IN PWR SPLY DECK ASSY

| QTY | IDENTIFYING NUMBER | DESCRIPTION | CODE IDENT | ITEM |
|---|---|---|---|---|

LIST OF MATERIALS

UNLESS OTHERWISE SPECIFIED DIMENSIONS ARE IN INCHES

DECIMALS 1PL ± 1 2PL ± .02

3PL ± .005 FRAC ± 1/64

ANG ± 1° SURFACE FINISH √

MATERIAL

SPEC NO.

FINISH

NEXT ASSEMBLY USED ON APPLICATION

CONTRACT NUMBER

DR

CHK

APPD

APPD

DESIGN ACTIVITY APPROVAL

CUSTOMER APPROVAL

varlan

WIRING DIAGRAM
POWER SUPPLY DECK
WIRE HARNESS
(DC INPUT)

| SIZE | CODE IDENT NO. | |
|---|---|---|
| D | 99313 | 113631-03 K |

SCALE

SHEET 2 OF 4

SUPERSEDES

113631

3440-09-04, 11/72

| REVISIONS | | | | | |
|---|---|---|---|---|---|
| ZONE | LTR | DESCRIPTION | EO | DATE | APPROVED |

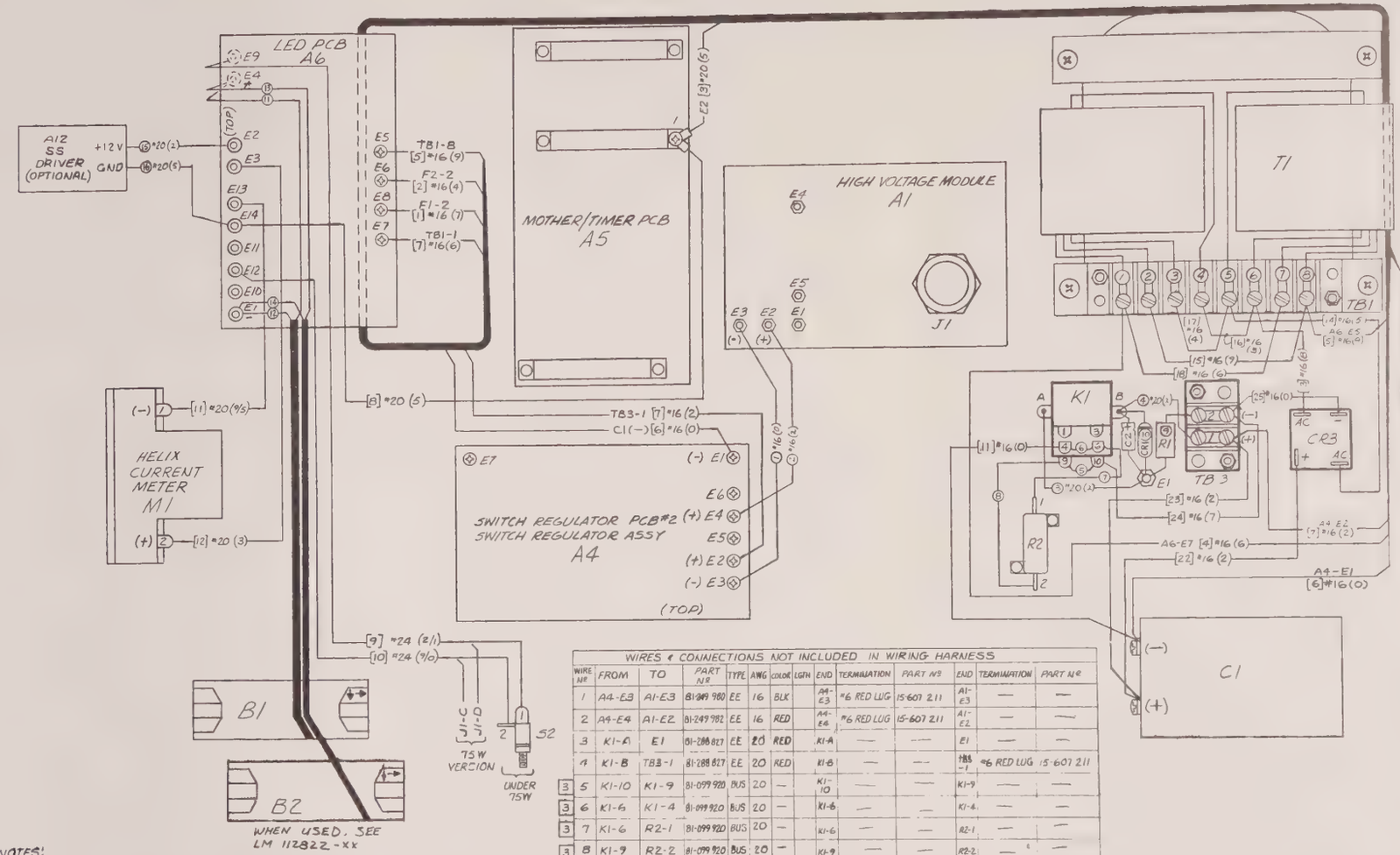


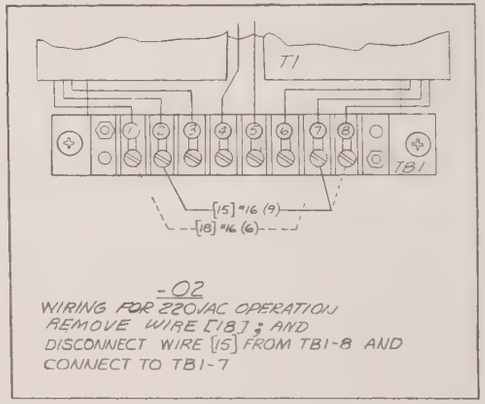


-02
WIRING FOR 220VAC OPERATION
REMOVE WIRE [18]; AND
DISCONNECT WIRE [15] FROM TB1-8 AND
CONNECT TO TB1-7

WIRES & CONNECTIONS NOT INCLUDED IN WIRING HARNESS

| | WIRE Nº | FROM | TO | PART Nº | TYPE | AWG | COLOR | LGTH | END | TERMINATION | PART Nº | END | TERMINATION | PART Nº |
|---|---|---|---|---|---|---|---|---|---|---|---|---|---|---|
| | 1 | A4-E3 | A1-E3 | 81-249 980 | EE | 16 | BLK | | A4-E3 | #6 RED LUG | 15-607 211 | A1-E3 | — | — |
| | 2 | A4-E4 | A1-E2 | 81-249 982 | EE | 16 | RED | | A4-E4 | #6 RED LUG | 15-607 211 | A1-E2 | — | — |
| | 3 | K1-A | E1 | 81-288 827 | EE | 20 | RED | | K1-A | — | — | E1 | — | — |
| | 4 | K1-B | TB3-1 | 81-288 827 | EE | 20 | RED | | K1-B | — | — | TB3-1 | #6 RED LUG | 15-607 211 |
| 3 | 5 | K1-10 | K1-9 | 81-099 920 | BUS | 20 | — | | K1-10 | — | — | K1-9 | — | — |
| 3 | 6 | K1-6 | K1-4 | 81-099 920 | BUS | 20 | — | | K1-6 | — | — | K1-4 | — | — |
| 3 | 7 | K1-6 | R2-1 | 81-099 920 | BUS | 20 | — | | K1-6 | — | — | R2-1 | — | — |
| 3 | 8 | K1-9 | R2-2 | 81-099 920 | BUS | 20 | — | | K1-9 | — | — | R2-2 | — | — |
| 3 | 9 | E1 | TB3-2 | R1 | — | — | — | — | E1 | — | — | TB3-2 | #6 RED LUG | 15-607 211 |
| 3 | 10 | E1 | K1-B | CR1 | — | — | — | — | E1 | ANODE | — | K1-B | CATH | — |
| | 11 | B1(−) | A6-E1 | SUPPLIED WITH B1 | | | | | B1 (−) | — | — | A6-E1 | — | — |
| | 12 | B1(+) | A6-E4 | " | " | " | | | B1 (+) | — | — | A6-E4 | — | — |
| 4 | 13 | B2(−) | A6-E1 | " | " | B2 | | | B2 (−) | — | — | A6-E1 | — | — |
| 4 | 14 | B2(+) | A6-E4 | " | " | " | | | B2 (+) | — | — | A6-E4 | — | — |
| 4 | 15 | A12(+12V) | A6-E2 | 81-288 827 | EE | 20 | RED | | A12 (12V) | — | — | A6-E2 | — | — |
| 4 | 16 | A12(GND) | A6-E14 | 81-288 830 | EE | 20 | GRN | | A12 (GND) | — | — | A6-E14 | — | — |
| | 17 | E1 | K1-B | C2 | " | " | | | E1 | C2(−) | | K1-B | C2(+) | |

NOTES:
1. LEGEND —
   [ ] = WIRE Nº FROM "WIRE HARNESS" TABLE (SHEET 4)
   ○ = WIRE Nº FROM "WIRES NOT IN HARNESS" TABLE (SHEET 3)
   * = WIRE AWG SIZE
   ( ) = WIRE COLOR
2. REFERENCE DESIGNATIONS REFER TO ITEMS LISTED ON LM 112822 (EXCEPT J1-C, J1-D, S2, A12).
3. BARE WIRE REQUIRES SLEEVING, PART Nº 88-489 020.
4. OPTIONAL

| QTY | IDENTIFYING NUMBER | DESCRIPTION | CODE IDENT | ITEM |
|---|---|---|---|---|

LIST OF MATERIALS

UNLESS OTHERWISE SPECIFIED DIMENSIONS ARE IN INCHES
DECIMALS: 1PL ± .1 2PL ± .02
3PL ± .005 FRAC ± 1/64
ANG ± 1° SURFACE FINISH
MATERIAL
SPEC NO.
FINISH
NEXT ASSEMBLY USED ON APPLICATION

CONTRACT NUMBER
DR
CHK
APPD
APPD
DESIGN ACTIVITY APPROVAL
CUSTOMER APPROVAL

varian
MICROWAVE EQUIPMENT OPERATIONS
SANTA CLARA, CALIFORNIA

# WIRING DIAGRAM POWER SUPPLY DECK INTERCONNECTION (AC INPUT)

| SIZE | CODE IDENT NO | | |
|---|---|---|---|
| D | 99313 | 113631-02 | K |

SCALE 0.75 SHEET 3 OF 4

SUPERSEDES

3440-09-04, 11/72

113631

| REVISIONS | | | | | |
|---|---|---|---|---|---|
| ZONE | LTR | DESCRIPTION | EO | DATE | APPROVED |

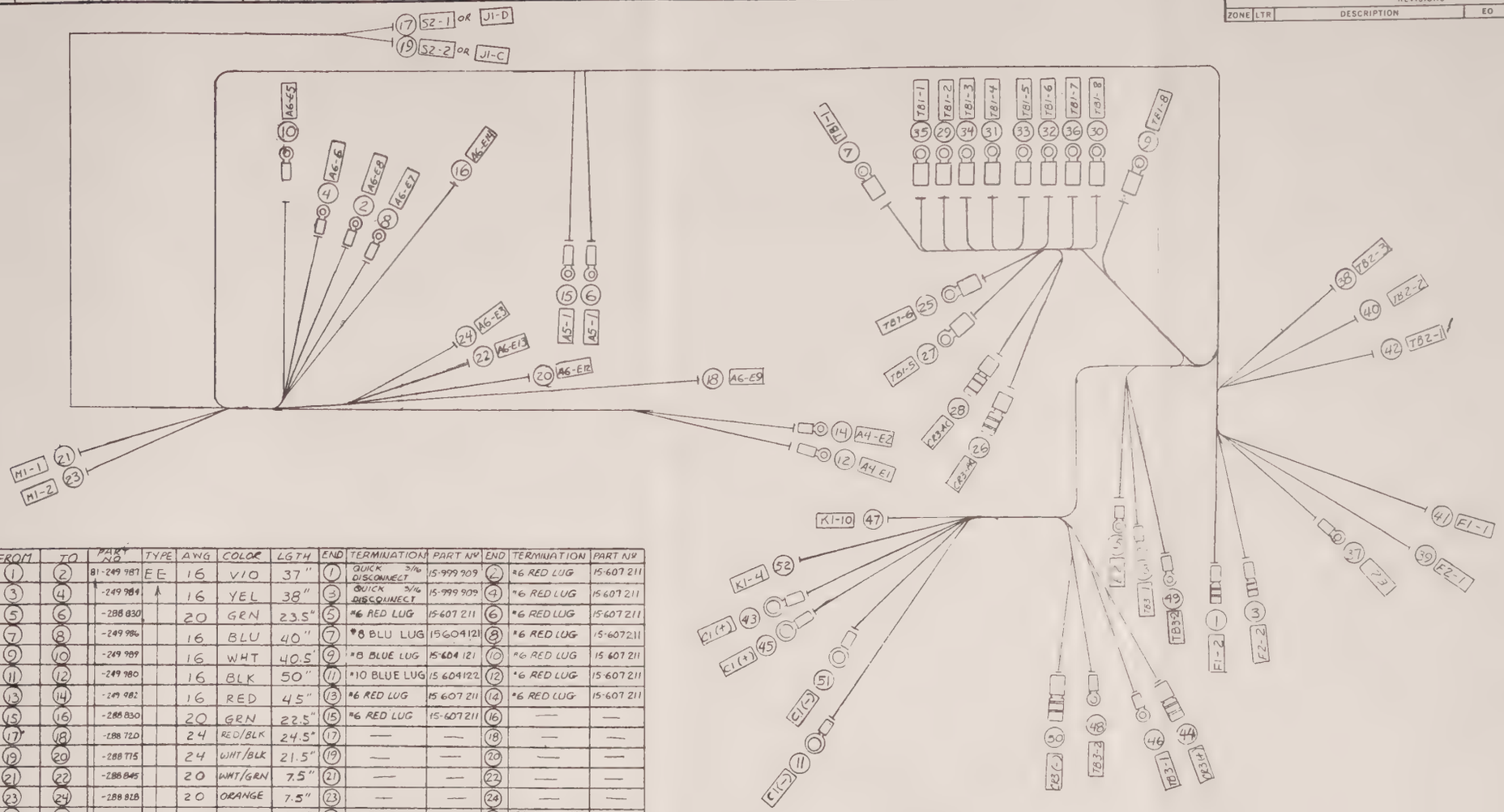


| WIRE NO | FROM | TO | FROM | TO | PART NO | TYPE | AWG | COLOR | LGTH | END | TERMINATION | PART NO | END | TERMINATION | PART NO |
|---|---|---|---|---|---|---|---|---|---|---|---|---|---|---|---|
| 1 | F1-2 | A6-E8 | 1 | 2 | 81-249 987 | EE | 16 | VIO | 37" | 1 | QUICK 3/16 DISCONNECT | 15-999 909 | 2 | #6 RED LUG | 15-607 211 |
| 2 | F2-2 | A6-E6 | 3 | 4 | -249 984 | | 16 | YEL | 38" | 3 | QUICK 3/16 DISCONNECT | 15-999 909 | 4 | #6 RED LUG | 15-607 211 |
| 3 | E2 | A5-1 | 5 | 6 | -288 830 | | 20 | GRN | 23.5" | 5 | #6 RED LUG | 15-607 211 | 6 | #6 RED LUG | 15-607 211 |
| 4 | TB1-1 | A6-E7 | 7 | 8 | -249 986 | | 16 | BLU | 40" | 7 | #8 BLU LUG | 15604121 | 8 | #6 RED LUG | 15-607211 |
| 5 | TB1-8 | A6-E5 | 9 | 10 | -249 989 | | 16 | WHT | 40.5" | 9 | #8 BLUE LUG | 15-604 121 | 10 | #6 RED LUG | 15 607 211 |
| 6 | C1(-) | A4-E1 | 11 | 12 | -249 980 | | 16 | BLK | 50" | 11 | #10 BLUE LUG | 15 604122 | 12 | #6 RED LUG | 15-607 211 |
| 7 | TB3-1 | A4-E2 | 13 | 14 | -249 982 | | 16 | RED | 45" | 13 | #6 RED LUG | 15 607 211 | 14 | #6 RED LUG | 15-607 211 |
| 8 | A5-1 | A6-E14 | 15 | 16 | -288 830 | | 20 | GRN | 22.5" | 15 | #6 RED LUG | 15-607 211 | 16 | — | — |
| 9 | S2-1 | A6-E9 | 17 | 18 | -288 720 | | 24 | RED/BLK | 24.5" | 17 | — | — | 18 | — | — |
| 10 | S2-2 | A6-E12 | 19 | 20 | -288 715 | | 24 | WHT/BLK | 21.5" | 19 | — | — | 20 | — | — |
| 11 | M1-1 | A6-E13 | 21 | 22 | -288 845 | | 20 | WHT/GRN | 7.5" | 21 | — | — | 22 | — | — |
| 12 | M1-2 | A6-E3 | 23 | 24 | -288 818 | | 20 | ORANGE | 7.5" | 23 | — | — | 24 | — | — |
| 13 | TB1-6 | CR3-AC | 25 | 26 | -249 988 | | 16 | GRY | 4.5" | 25 | #8 BLUE LUG | 15-604 121 | 26 | QUICK 1/4 DISCONNECT | 15-999 902 |
| 14 | TB1-5 | CR3-AC | 27 | 28 | 985 | | 16 | GRN | 4.5" | 27 | #8 BLUE LUG | 15-604 121 | 28 | QUICK 1/4 DISCONNECT | 15-999 902 |
| 15 | TB1-2 | TB1-8 | 29 | 30 | 989 | | 16 | WHT | 5.5" | 29 | #8 BLUE LUG | 15 604 121 | 30 | #8 BLUE LUG | 15-604 121 |
| 16 | TB1-4 | TB1-6 | 31 | 32 | 983 | | 16 | OR | 3.5" | 31 | #8 BLUE LUG | 15 604 121 | 32 | #8 BLUE LUG | 15-604 121 |
| 17 | TB1-5 | TB1-3 | 33 | 34 | 984 | | 16 | YEL | 3.5" | 33 | #8 BLUE LUG | 15-604 121 | 34 | #8 BLUE LUG | 15-604 121 |
| 18 | TB1-1 | TB1-7 | 35 | 36 | 986 | | 16 | BLU | 5.5" | 36 | #8 BLUE LUG | 15 604 121 | 36 | #8 BLUE LUG | 15-604 121 |
| 19 | E2 | TB2-3 | 37 | 38 | 988 | | 16 | GRN | 6" | 37 | #6 RED LUG | 15-607 211 | 38 | — | — |
| 20 | F2-1 | TB2-2 | 39 | 40 | 994 | | 16 | YEL | 7.5" | 39 | — | — | 40 | — | — |
| 21 | E1-1 | TB2-1 | 41 | 42 | 987 | | 16 | VIO | 7.5" | 41 | — | — | 42 | — | — |
| 22 | C1(+) | CR3(+) | 43 | 44 | 992 | | 16 | RED | 8.5" | 43 | #10 BLUE LUG | 15-604 122 | 44 | QUICK 1/4 DISCONNECT | 15-999 902 |
| 23 | C1(+) | TB3-1 | 45 | 46 | 981 | | 16 | RED | 8.6" | 45 | #10 BLUE LUG | 15-604 122 | 46 | #6 RED LUG | 15-607 211 |
| 24 | K1-10 | TB3-2 | 47 | 48 | 980 | | 16 | VIO | 5" | 47 | — | — | 48 | #6 RED LUG | 15-607 211 |
| 25 | TB3-2 | CR3(-) | 49 | 50 | 980 | | 16 | BLK | 10" | 49 | #6 RED LUG | 15-607-211 | 50 | QUICK 1/4 DISCONNECT | 15-999 902 |
| 26 | C1(-) | K1-4 | 51 | 52 | 81-249 987 | EE | 16 | BLK | 6" | 51 | #10 BLUE LUG | 15-604 122 | 52 | — | — |

NOTE:

⬭ = INFORMATION USED IN HARNESS STATION

▭ = INFORMATION USED IN PWR SPLY DECK ASSY.

| QTY | IDENTIFYING NUMBER | DESCRIPTION | CODE IDENT | ITEM |
|---|---|---|---|---|
| | | LIST OF MATERIALS | | |

| | | | |
|---|---|---|---|
| NEXT ASSEMBLY | USED ON | UNLESS OTHERWISE SPECIFIED DIMENSIONS ARE IN INCHES | CONTRACT NUMBER |
| APPLICATION | | DECIMALS 1PL ± 1 2PL ± 02 | DR |
| | | 3PL ± 005 FRAC ± 1/64 | CHK |
| | | ANG ± 1° SURFACE FINISH √ | APPD |
| | | MATERIAL | APPD |
| | | SPEC NO | DESIGN ACTIVITY APPROVAL |
| | | FINISH | CUSTOMER APPROVAL |

varian

MICROWAVE EQUIPMENT OPERATIONS
SANTA CLARA, CALIFORNIA

# WIRING DIAGRAM POWER SUPPLY DECK WIRE HARNESS (AC INPUT)

| SIZE | CODE IDENT NO. | | |
|---|---|---|---|
| D | 99313 | 113631-02 | K |

SCALE — SHEET 1 OF 1

SUPERSEDES

3440-08-04, 11/72

## MANUFACTURING INSTRUCTIONS FOR LEAD ATTACHMENT TO CONNECTOR J2

1. ROUTE WIRES FROM CONNECTOR J2 AS SHOWN KEEPING WIRES AS CLOSE TO CONNECTOR BODY AS POSSIBLE.
2. STRIP INSULATION FROM LEAD ENDS APPROX. .1" TO PREVENT BARE WIRE FROM SHORTING TO ADJACENT PIN AFTER SOLDER CONNECTION IS MADE.

| WIRE COLOR | AWG | J2 DESTINATION |
|---|---|---|
| WHT/RED | 20 | "A" |
| RED | 24 | "B" |
| YEL | 24 | "D" |
| WHT | 20 | "F" |
| BLK | 24 | "H" |
| ORN | 20 | "J" |
| BLU | 20 | "K" |
| WHT/YEL | 24 | "L" |

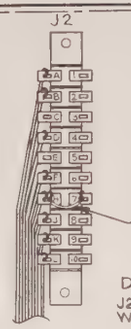


DETAIL A
J2 CONNECTION/WITH WIRE ATTACHMENT (TERMINAL SIDE)

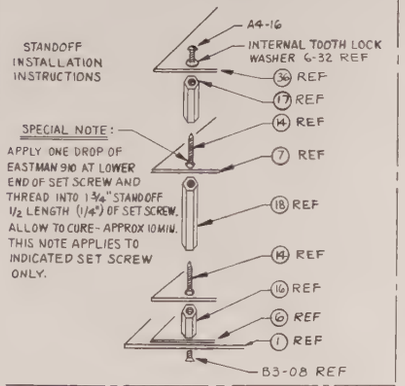


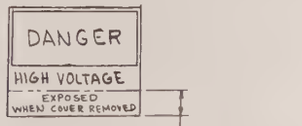


VIEW B

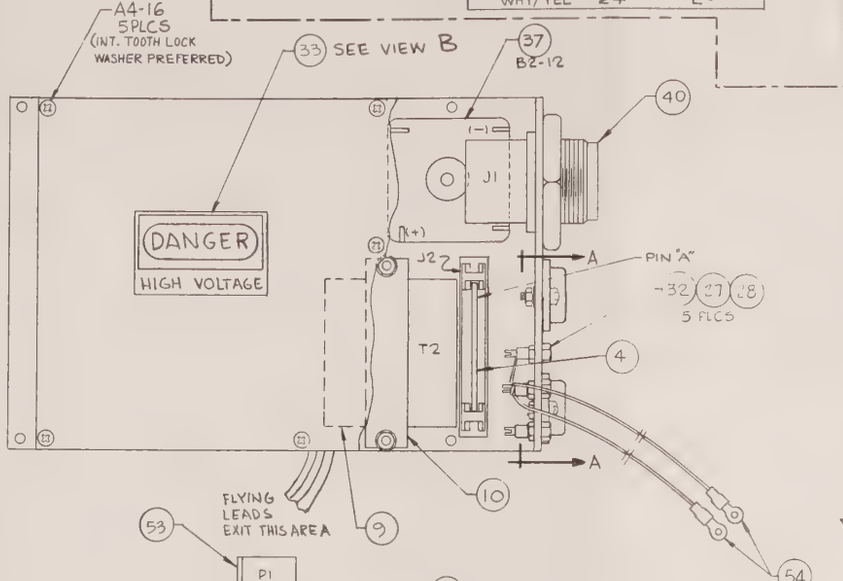


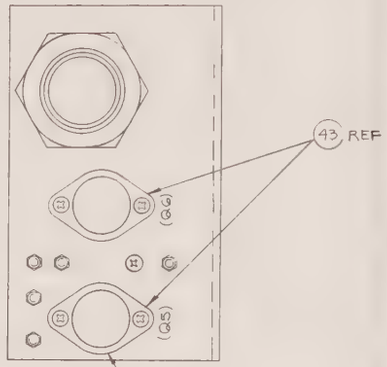


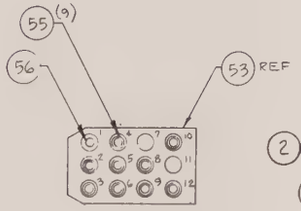


VIEW AA
SCALE: NONE

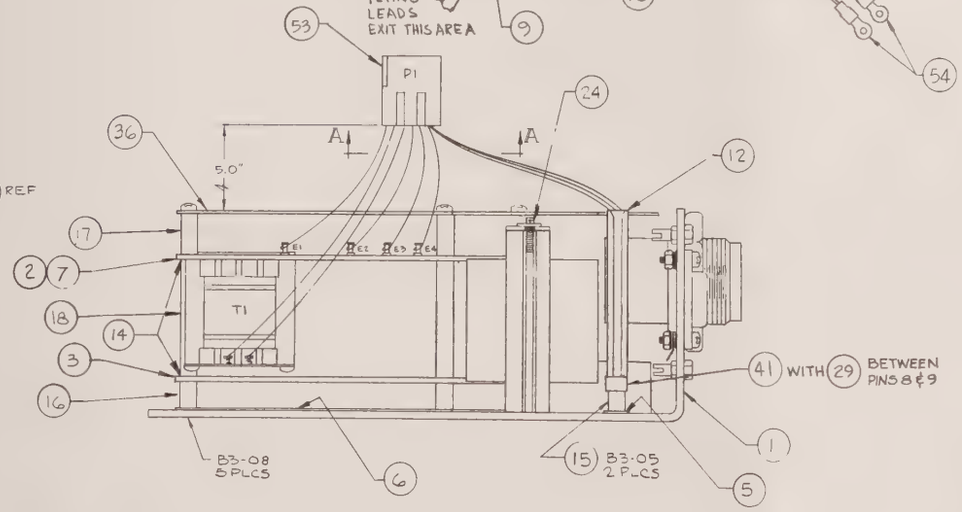


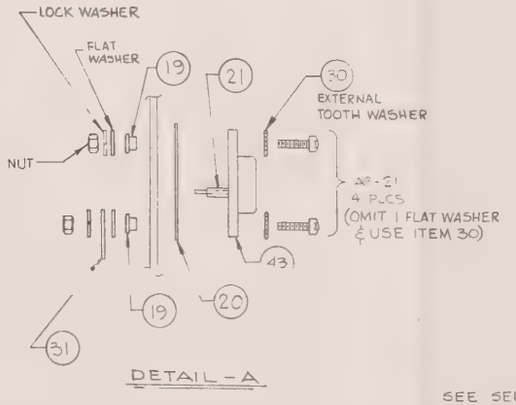


DETAIL-A

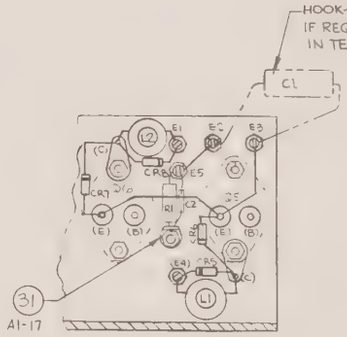


VIEW A-A
(ROTATED 90°)

PS12898-A

SEE SEPARATE WIRE LIST WL113094
SEE SEPARATE LIST OF MATERIALS LM 113094

| QTY | IDENTIFYING NUMBER | DESCRIPTION | CODE IDENT | ITEM |
|---|---|---|---|---|
| LIST OF MATERIALS | | | | |

| REVISIONS | | | | | |
|---|---|---|---|---|---|
| ZONE | LTR | DESCRIPTION | EO | DATE | APPROVED |
| | A | INC E O | PS 11392 | 8-2-76 | |
| | B | REVISED PER MFG REQUEST | — | 10-22-76 | |
| | C | INC E O | PS 11836 | 4-28-77 | |
| | D | INC E O ADDED -02 PS12021 | PS11926 PS11951 | 6-8-77 | |
| | E | INC E.O. | PS12063 | 7-14-77 | |
| | F | INC E.O. | PS12228 | 11-23-77 | |
| | G | INC E O. | PS12594 | 7-19-78 | |
| | H | INC E.O. | PS12666 | 9-19-78 | |
| | J | INC E.O. | PS12806 | 9-14-78 | |
| | K | INC E.O. | PS12898 | 11-1-78 | |

| | | | |
|---|---|---|---|
| NEXT ASSEMBLY | USED ON | | |
| APPLICATION | | | |

UNLESS OTHERWISE SPECIFIED DIMENSIONS ARE IN INCHES
DECIMALS: 1PL ± .1 2PL ± 02
3PL ± 005 FRAC ± 1 64
ANG ± 1° SURFACE FINISH ✓
MATERIAL
SPEC NO.
FINISH

| CONTRACT NUMBER | | |
|---|---|---|
| DR | F. GAMBLE | 6-3-76 |
| CHK | | 6-7-76 |
| APPD | | 11/14/76 |
| APPD | W. Berg | 2/1/76 |
| DESIGN ACTIVITY APPROVAL | | |
| CUSTOMER APPROVAL | | |

varian
MICROWAVE EQUIPMENT OPERATIONS
SANTA CLARA, CALIFORNIA

# ASSEMBLY HIGH VOLTAGE MODULE

| SIZE | CODE IDENT NO. | | |
|---|---|---|---|
| D | 19313 | 113094 | K |
| SCALE 1:1 | | SHEET 1 OF 2 | |

SUPERSEDES

2. ASSEMBLE USING HARDWARE/DWG 110625.
1. ASSEMBLY /WIRING /PC MAINSHIP STD. 87-800-192.
NOTES

3440-09-04, 11/72

113094 D

| REVISIONS | | | | | |
|---|---|---|---|---|---|
| ZONE | LTR | DESCRIPTION | EO | DATE | APPROVED |

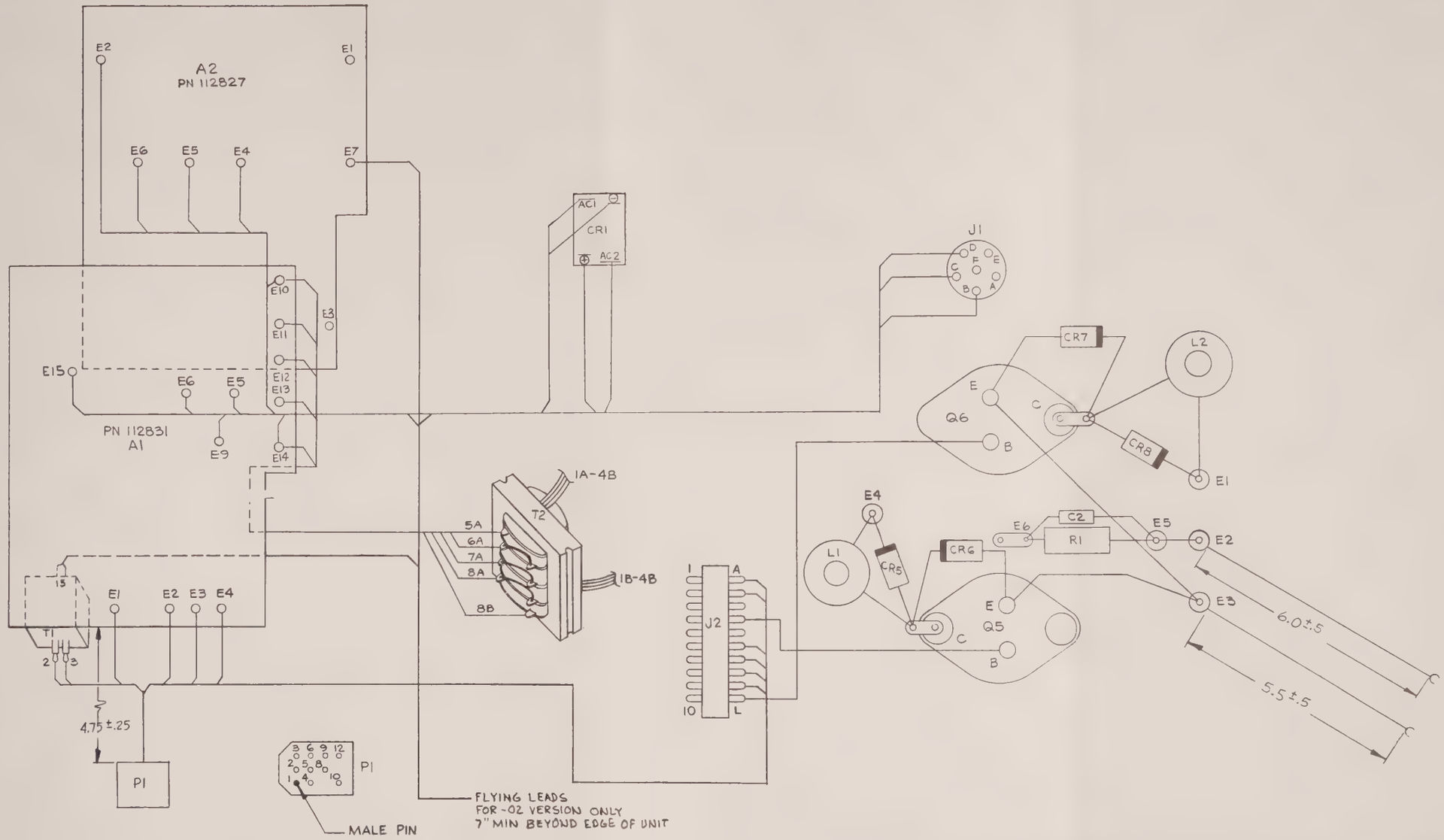


NOTES: 1. PREWIRE P1, J1, J2, & T2.

| QTY | IDENTIFYING NUMBER | DESCRIPTION | CODE IDENT | ITEM |
|---|---|---|---|---|

LIST OF MATERIALS

| | | |
|---|---|---|
| NEXT ASSEMBLY | USED ON | |
| APPLICATION | | |

UNLESS OTHERWISE SPECIFIED DIMENSIONS ARE IN INCHES
DECIMALS: 1PL ± .1 2PL ± .02
3PL ± .005 FRAC ± 1/64
ANG ± 1° SURFACE FINISH J
MATERIAL
SPEC NO.
FINISH

CONTRACT NUMBER

| | | |
|---|---|---|
| DR | Tillie Evans | 10-14-76 |
| CHK | D. Kay | 10-27-76 |
| APPD | [illegible] | 11/6/76 |
| APPD | W. I. Bates | 11/17/76 |

DESIGN ACTIVITY APPROVAL
CUSTOMER APPROVAL

varian
MICROWAVE EQUIPMENT OPERATIONS
SANTA CLARA, CALIFORNIA

# WIRING LAYOUT

| SIZE | CODE IDENT NO | | |
|---|---|---|---|
| D | 99313 | 113094 | J |

SCALE
SHEET 2 OF 2

SUPERSEDES

113094

3440-09-04, 11/73

| varian | MICROWAVE EQUIPMENT OPERATIONS | TITLE ASSEMBLY, HIGH VOLTAGE MODULE | LM 113094 | REV K |
|---|---|---|---|---|
| CODE IDENT NO 99313 | APPROVAL [illegible] DATE [illegible] 11/17/76 | | | |

| APPLICATION | | | REVISION | | | | |
|---|---|---|---|---|---|---|---|
| NEXT ASSEMBLY | USED ON | EO | REV | DESCRIPTION | EO | DATE | APPROVED |
| | VZL-6986-D6 | | G | INC. E.O. | PS-12544 | 9-15-78 | MHS |
| | | | H | INC. E.O. | PS-12606 | 9-15-78 | MHS |
| | | | J | INC. E.O. | PS-12806 | 9-15-78 | MHS |
| | | | K | INC E.O. | PS-12898 | 10-31-78 | |

-00 COMMUNICATIONS, 50 W
-01 COMMUNICATIONS, 100W
-02 COMMERCIAL VERSION

REVISION STATUS

| SHEET | | | | | | | | | | | | | | | | | | | | | | | | | | |
|---|---|---|---|---|---|---|---|---|---|---|---|---|---|---|---|---|---|---|---|---|---|---|---|---|---|---|
| LTR | | | | | | | | | | | | | | | | | | | | | | | | | | |
| SHEET | | | | | | | | | | | | | | | | | | | | | | | | | | |
| LTR | | | | | | | | | | | | | | | | | | | | | | | | | | |
| SHEET | | | | | | | | | | | | | | | | | | | | | | | | | | |
| LTR | | | | | | | | | | | | | | | | | | | | | | | | | | |

| varian | MICROWAVE EQUIPMENT OPERATIONS | ASSEMBLY, HIGH VOLTAGE MODULE | LM 113094 | REV K |
|---|---|---|---|---|

| ITEM NO | REF DES | DESCRIPTION | VARIAN PART NO. | MFG | MFG OR MS PART NO. | QTY/DASH NO. | | | |
|---|---|---|---|---|---|---|---|---|---|
| | | | | | | -00 | -01 | -02 | -03 |
| 1 | | CHASSIS, HIGH VOLTAGE MODULE | D113014-00 | | | 1 | - | 1 | |
| | | CHASSIS, HIGH VOLTAGE MODULE | D113014-01 | | | - | 1 | - | |
| 2 | A1 | HIGH VOLTAGE PWB (TOP) | C112831-00 | | | 1 | 1 | - | |
| 3 | A2 | HIGH VOLTAGE PWB (BOTTOM) | C112827 | | | 1 | 1 | 1 | |
| 4 | A3 | CONVERTER PWB | C112835 | | | 1 | 1 | 1 | |
| 5 | | INSULATOR, CONNECTOR | B113092 | | | 1 | 1 | 1 | |
| 6 | | INSULATOR, BOTTOM | C113093 | | | 1 | 1 | 1 | |
| 7 | A1 | HIGH VOLTAGE PWB (TOP) | C112831-01 | | | - | - | 1 | |
| 8 | R1 | RESISTOR, COMP., 10K, 1W, 5% | 33-301510 | | RC32GF103J | 1 | 1 | 1 | |
| 9 | | | | | | | | | |
| 10 | | TRANSFORMER CLAMP | B113095-01 | | | 1 | 1 | 1 | |
| 11 | | | | | | | | | |
| 12 | | CARD GUIDE | 22-319801 | SAE | 1250V | 2 | 2 | 2 | |
| 13 | | WASHER, LOCK-INT. TOOTH, #6 | 14-909901 | FED. SCREW | | 5 | 5 | 5 | |
| 14 | | SCREW, SET #6 X 1/2 NYLON | 11-907903 | PRODUCTS COMPONENTS | | 10 | 10 | 10 | |
| 15 | | SPACER, #4 x 1/4, ALUM. | 22-419834 | AMATOM | 9224-A-115 | 2 | 2 | 2 | |
| 16 | | SPACER, #6x 3/8, NYLON | 22-431024 | RAF | 2102-632-N-0 | 5 | 5 | 5 | |
| 17 | | SPACER, #6x 5/8, NYLON | 22-431022 | RAF | 2106-632-N-0 | 5 | 5 | 5 | |
| 18 | | SPACER, #6x 1-3/4, NYLON | 22-431023 | RAF | 2124-632-N-0 | 5 | 5 | 5 | |
| 19 | | NYLON SHOULDER WASHER | 14-998001 | FED. SCREW | 105101 | 4 | 4 | 4 | |
| 20 | | INSULATOR, TRANSISTOR | 62-898002 | UNION CARBIDE | H-4001 | 2 | 2 | 2 | |

| varian | MICROWAVE EQUIPMENT OPERATIONS | ASSEMBLY, HIGH VOLTAGE MODULE | LM 113094 | REV K |
|---|---|---|---|---|

| ITEM NO. | REF DES | DESCRIPTION | VARIAN PART NO. | MFG | MFG OR MS PART NO. | QTY/DASH NO. -00 | -01 | -02 | -03 |
|---|---|---|---|---|---|---|---|---|---|
| 21 | | SLEEVING, FIBERGLASS | 88-495071 | BENTLEY HARRIS | BEN HAR 1062-H18 | AR | AR | AR | |
| 22 | | ADHESIVE, CYANACRYLATE | 88-199620 | EASTMAN KODAK CO. | EASTMAN 910 | AR | AR | AR | |
| 23 | | | | | | | | | |
| 24 | | SCREW, 6-32 x 3 FHMS | 12-112006-40 | | | 2 | 2 | 2 | |
| 25 | | | | | | | | | |
| 26 | | | | | | | | | |
| 27 | | Nut, 4-40 | 13-102004 | | | 5 | 5 | 5 | |
| 28 | | WASHER, SPLIT LOCK | 14-202004 | | | 5 | 5 | 5 | |
| 29 | | KEY POLARIZING | 51-959930 | VIKING | 091-0024-000 | 1 | 1 | 1 | |
| 30 | | EXTERNAL TOOTH LOCKWASHER | 14-317106 | | | 4 | 4 | 4 | |
| 31 | | SOLDER LUG #6 | 16-139910 | ZIERICK | 805-#6 | 3 | 3 | 3 | |
| 32 | E1-E5 | TERMINAL, INSULATED | 16-339931 | USECO | 755 | 5 | 5 | 5 | |
| 33 | | SIGN, "CAUTION HIGH VOLTAGE" | B112379-00 | | | 1 | 1 | 1 | |
| 34 | C1 | CAPACITOR, 8.2 μf, 100V | 41-506127 DIT | SPRAGUE | 600D825F100KD4 | 1 | 1 | 1 | |
| 35 | C2 | CAPACITOR, CERAMIC, .1 μf, 100V | 41-229952 | | CK06BX104K | 1 | 1 | 1 | |
| 36 | | INSULATOR, TOP | C113102 | | | 1 | 1 | 1 | |
| 37 | CR1 | HIGH VOLTAGE BRIDGE RECTIFIER | B112949 | VARO | H1427 | 1 | 1 | 1 | |
| 38 | CR5, 8 | DIODE | 66-304936 | | 1N4936 | 2 | 2 | 2 | |
| 39 | CR6, 7 | DIODE SX100 | 66-393301 | | | 2 | 2 | 2 | |
| 40 | J1 | CONNECTOR, 6 PIN | 51-408906 | WINCHESTER | PM6SLR-N | 1 | - | 1 | |
| | J1 | CONNECTOR, 6 PIN | 51-231823 | AMP | 839527-1 | - | 1 | - | |

| varian | MICROWAVE EQUIPMENT OPERATIONS | ASSEMBLY, HIGH VOLTAGE MODULE | LM 113094 | REV K |
|---|---|---|---|---|

| ITEM NO | REF DES | DESCRIPTION | VARIAN PART NO. | MFG | MFG OR MS PART NO. | QTY/DASH NO. | | | |
|---|---|---|---|---|---|---|---|---|---|
| | | | | | | -00 | -01 | -02 | -03 |
| 41 | J2 | CONNECTOR, 10/20 PIN | 51-408006 | VIKING | 2VK10D/1-2 | 1 | 1 | 1 | |
| 42 | L1,2 | CHOKE | B112927 | | | 2 | 2 | 2 | |
| 43 | Q5,6 | TRANSISTOR, 2N5671 | 62-905671 | RCA ONLY NO SUBSTITUTES | | 2 | 2 | 2 | |
| 44 | T2 | TRANSFORMER | D112928 | | | 1 | 1 | 1 | |
| 45 | | WIRE, HIGH VOLTAGE, BLK, 20 AWG | 81-259750 | | | AR | AR | AR | |
| 46 | | WIRE, HIGH VOLTAGE, RED, 20 AWG | 81-259752 | | | AR | AR | AR | |
| 47 | | WIRE, HIGH VOLTAGE, ORN, 20 AWG | 81-259753 | | | AR | AR | AR | |
| 48 | | WIRE, HIGH VOLTAGE, YEL, 20 AWG | 81-259754 | | | AR | AR | AR | |
| 49 | | WIRE, HIGH VOLTAGE, GRN, 20 AWG | 81-259755 | | | AR | AR | AR | |
| 50 | | WIRE, HIGH VOLTAGE, BLU, 20 AWG | 81-259756 | | | AR | AR | AR | |
| 51 | | WIRE, HIGH VOLTAGE, GRY, 20 AWG | 81-259758 | | | AR | AR | AR | |
| 52 | | WIRE, HIGH VOLTAGE, WHT, 20 AWG | 81-259759 | | | AR | AR | AR | |
| 53 | P1 | CONNECTOR HOUSING, 12 CKTS. | 51-406467 | MOLEX | 03-09-1122 | 1 | 1 | 1 | |
| 54 | | LUG | 15-607211 | AMP | 36149 | 2 | 2 | 2 | |
| 55 | | TERMINAL, MALE | 51-910066 | MOLEX | 02-09-6123 | 1 | 1 | 1 | |
| 56 | | TERMINAL, FEMALE | 51-910067 | MOLEX | 02-09-5123 | 9 | 9 | 9 | |
| 57 | | WIRE, EE, TEF. INSUL., 20 AWG, RED | 81-288827 | | | AR | AR | AR | |
| 58 | | WIRE, EE, TEF. INSUL., 20 AWG, ORN | 81-288828 | | | AR | AR | AR | |
| 59 | | WIRE, EE, TEF. INSUL., 20 AWG, YEL | 81-288829 | | | AR | AR | AR | |
| 60 | | WIRE, EE, TEF. INSUL., 20 AWG, GRN | 81-288830 | | | AR | AR | AR | |
| 61 | | WIRE, EE, TEF. INSUL., 20 AWG, BLU | 81-288831 | | | AR | AR | AR | |

| varian | MICROWAVE EQUIPMENT OPERATIONS | ASSEMBLY, HIGH VOLTAGE MODULE | LM 113094 | REV K |
|---|---|---|---|---|

| ITEM NO | REF DES | DESCRIPTION | VARIAN PART NO. | MFG | MFG OR MS PART NO. | QTY/DASH NO. | | | |
|---|---|---|---|---|---|---|---|---|---|
| | | | | | | -00 | -01 | -02 | -03 |
| 62 | | WIRE, EE, TEF. INSUL., 20 AWG, VIO | 81-288832 | | | AR | AR | AR | |
| 63 | | WIRE, EE, TEF. INSUL., 20 AWG, GRY | 81-288833 | | | AR | AR | AR | |
| 64 | | WIRE, EE, TEF. INSUL., 20 AWG, WHT | 81-288834 | | | AR | AR | AR | |
| 65 | | WIRE, EE, TEF. INSUL., 20 AWG, BRN | 81-288826 | | | AR | AR | AR | |
| 66 | | WIRE, EE, TEF. INSUL., 20 AWG. WHT/RED | 81-288842 | | | AR | AR | AR | |
| 67 | | WIRE, EE, TEF. INSUL., 16 AWG, BRN | 81-249981 | | | AR | AR | AR | |
| 68 | | WIRE, EE, TEF. INSUL., 16 AWG, RED | 81-249982 | | | AR | AR | AR | |
| 69 | | WIRE, EE, TEF. INSUL., 16 AWG, WHT | 81-249989 | | | AR | AR | AR | |
| 70 | | WIRE, EE, TEF. INSUL., 20AWG, WHT/GRN | 81-288845 | | | AR | AR | AR | |
| 71 | | WIRE, EE, TEF. INSUL., 24 AWG, RED | 81-288722 | | | AR | AR | AR | |
| 72 | | WIRE, EE, TEF. INSUL., 24 AWG, YEL | 81-288744 | | | AR | AR | AR | |
| 73 | | WIRE, EE, TEF. INSUL., 24 AWG, BLK | 81-288700 | | | AR | AR | AR | |
| 74 | | WIRE, EE, TEF. INSUL., 24AWG, WHT/YEL | 81-288794 | | | AR | AR | AR | |
| 75 | | WIRE, HIGH VOLTAGE, 20 AWG, BRN | 81-259751 | | | AR | AR | AR | |
| 76 | | WIRE, BUS #22 AWG | 81-099922 | | | AR | AR | AR | |
| | | | | | | | | | |
| | | | | | | | | | |
| | | | | | | | | | |
| | | | | | | | | | |
| | | | | | | | | | |
| | | | | | | | | | |

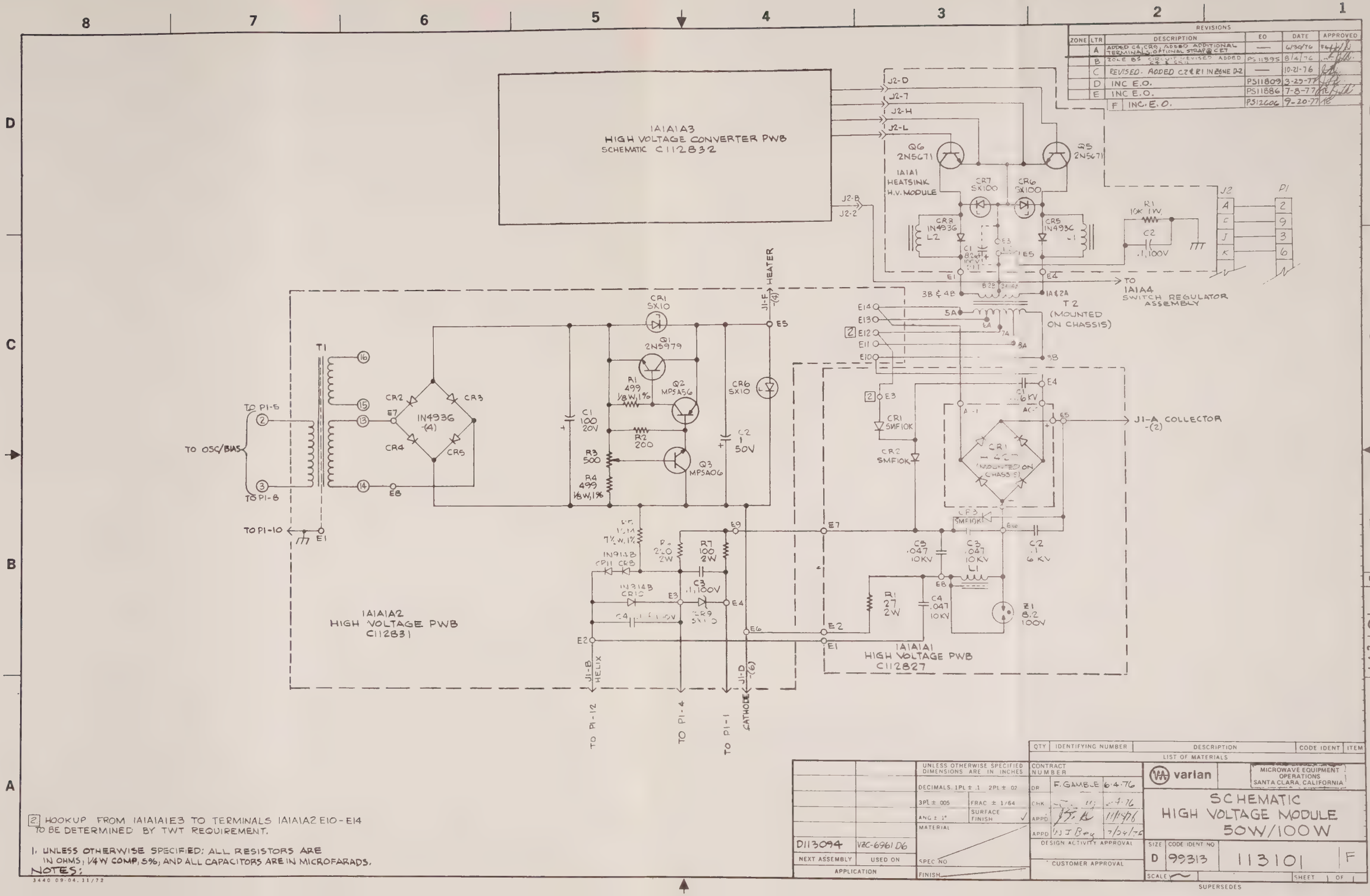

REVISIONS
ZONE | LTR | DESCRIPTION | EO | DATE | APPROVED
A | ADDED C4, CR9, ADDED ADDITIONAL TERMINALS, OPTIONAL STRAP @ C27 | — | 6/30/76
B | ZONE B5 CIRCUIT REVISED ADDED C4 & CR11 | PS11395 | 8/4/76
C | REVISED. ADDED C2 & R1 IN ZONE D-2 | — | 10-21-76
D | INC E.O. | PS11809 | 3-29-77
E | INC E.O. | PS11886 | 7-8-77
F | INC. E.O. | PS12606 | 9-20-77
1A1A1A3
HIGH VOLTAGE CONVERTER PWB
SCHEMATIC C112832
J2-D
J2-7
J2-H
J2-L
J2-B
J2-2
Q6 2N5671
Q5 2N5671
1A1A1 HEATSINK H.V. MODULE
CR7 SX100
CR6 SX100
CR8 1N4936 L2
CR5 1N4936 L1
C1 82µF 100V
R1 10K 1W
C2 .1, 100V
J2
P1
TO 1A1A4 SWITCH REGULATOR ASSEMBLY
T2 (MOUNTED ON CHASSIS)
3B & 4B
1A & 2A
5A
7A
8A
3B
E14
E13
E12
E11
E10
E1
E4
E5
HEATER
J1-F -(4)
CR1 SX10
Q1 2N5979
R1 499 1/8W, 1%
Q2 MPSA56
R2 200
Q3 MPSA06
R3 500
R4 499 1/8W, 1%
C1 100 20V
C2 1 50V
CR6 SX10
T1
TO P1-5
TO OSC/BIAS
TO P1-8
TO P1-10
CR2
CR3
CR4
CR5
1N4936 -(4)
E7
E8
E1
1A1A1A2
HIGH VOLTAGE PWB
C112831
R5 10M 7½W, 1%
R6 220 2W
R7 100 2W
C3 .1, 100V
1N914B CR11 CR8
1N914B CR10
C4 .1, 100V
CR9 SX10
E9
E3
E4
E6
E2
J1-B HELIX
J1-D -(6)
TO P1-12
TO P1-4
TO P1-1
CATHODE
CR1 SMF10K
CR2 SMF10K
CR1 (MOUNTED ON CHASSIS)
C1 .1 6KV
J1-A COLLECTOR -(2)
CR3 SMF10K
C5 .047 10KV
C3 .047 10KV
C2 .1 6KV
L1
R1 27 2W
C4 .047 10KV
Z1 8.2 100V
1A1A1A1
HIGH VOLTAGE PWB
C112827
2 HOOKUP FROM 1A1A1A1E3 TO TERMINALS 1A1A1A2 E10-E14 TO BE DETERMINED BY TWT REQUIREMENT.
1. UNLESS OTHERWISE SPECIFIED: ALL RESISTORS ARE IN OHMS, 1/4W COMP, 5%, AND ALL CAPACITORS ARE IN MICROFARADS.
NOTES:
3440 09-04.11/72
QTY | IDENTIFYING NUMBER | DESCRIPTION | CODE IDENT | ITEM
LIST OF MATERIALS
UNLESS OTHERWISE SPECIFIED DIMENSIONS ARE IN INCHES
DECIMALS 1PL ± .1 2PL ± .02
3PL ± .005
FRAC ± 1/64
ANG ± 1°
SURFACE FINISH
MATERIAL
SPEC NO
FINISH
D113094 | VZC-6961 D6
NEXT ASSEMBLY | USED ON
APPLICATION
CONTRACT NUMBER
DR F. GAMBLE 6-4-76
CHK 6-4-76
APPD 11/15/76
APPD 7/24/76
DESIGN ACTIVITY APPROVAL
CUSTOMER APPROVAL
varian
MICROWAVE EQUIPMENT OPERATIONS SANTA CLARA, CALIFORNIA
SCHEMATIC
HIGH VOLTAGE MODULE
50W/100W
SIZE D
CODE IDENT NO 99313
113101
F
SCALE
SHEET 1 OF 1
SUPERSEDES
113101

| ZONE | LTR | DESCRIPTION | EO | DATE | APPROVED |
|---|---|---|---|---|---|
| | A | REVISED PER ARTWORK CHG'S | — | 7-21-76 | [illegible] |
| | B | INC E.O | PS11419 | 8-17-76 | [illegible] |
| | C | ADDED ITEMS 16-21 | — | 10-26-76 | [illegible] |
| | D | INC EO | PS11712 | 2-2-77 | [illegible] |
| | E | INC E.O. | PS12044 | 2-8-77 | [illegible] |
| | F | INC E.O. | PS12422 | 3-31-78 | [illegible] |
| | G | INC E.O. | PS12283 | 9-18-78 | [illegible] |
| | H | INC E.O. | PS12325 | 9-18-78 | [illegible] |
| | J | INC E.O. | PS12771 | 9-18-78 | [illegible] |

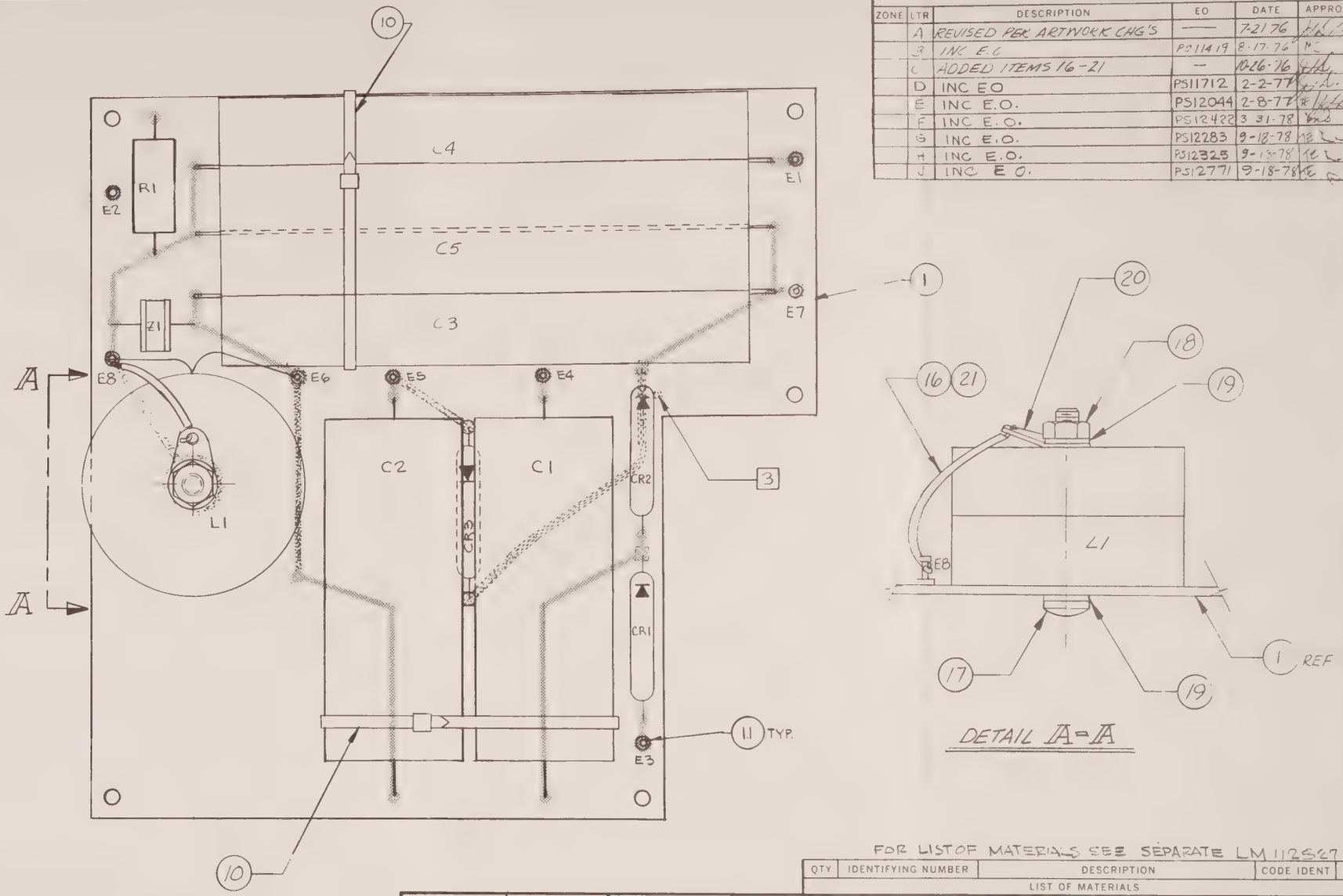


FOR LIST OF MATERIALS SEE SEPARATE LM 112827

| QTY | IDENTIFYING NUMBER | DESCRIPTION | CODE IDENT | ITEM |
|---|---|---|---|---|

LIST OF MATERIALS

3. MARK CURRENT REVISION LETTER OF ASSY (OPPOSITE SIDE)
2. ASSEMBLE USING HARDWARE DWG 110625
1. ASSEMBLE/VARIAN WORKMANSHIP STD 87-800-299.
NOTES:

| NEXT ASSEMBLY | USED ON |
|---|---|
| D113094 | VEC-6961 D6 |

APPLICATION

UNLESS OTHERWISE SPECIFIED DIMENSIONS ARE IN INCHES
DECIMALS: 1PL ± .1 2PL ± .02
3PL ± .005 FRAC ± 1/64
ANG ± 1 SURFACE FINISH ✓
MATERIAL
SPEC NO.
FINISH

CONTRACT NUMBER

| | | |
|---|---|---|
| DR | F. GAMBLE | 6-11-76 |
| CHK | [illegible] | 6-14-76 |
| APPD | [illegible] | 11/15/76 |
| APPD | WI B-4 | 7/21/76 |

DESIGN ACTIVITY APPROVAL
CUSTOMER APPROVAL

varian
MICROWAVE EQUIPMENT OPERATIONS
SANTA CLARA, CALIFORNIA

ASSEMBLY
HIGH VOLTAGE PWB
(BOTTOM)

| SIZE | CODE IDENT NO | | |
|---|---|---|---|
| C | 99313 | 112827 | J |

SCALE 2:1 SHEET 1 OF 2

SUPERSEDES

3440-09-03 11/72 PRINTED IN U.S.A.

112827 C

| REVISIONS | | | | |
|---|---|---|---|---|
| ZONE LTR | DESCRIPTION | EO | DATE | APPROVED |

CAPACITOR MOUNTING

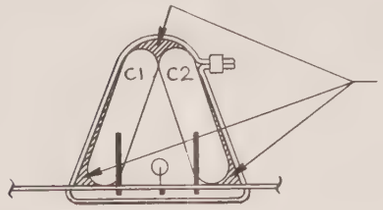


APPLY FILLET OF RTV 3145 CLEAR, 3 PLACES FOR LENGTH OF CAPACITOR

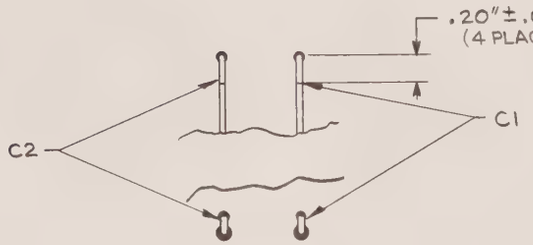


VIEW FROM CIRCUIT SIDE OF PCB

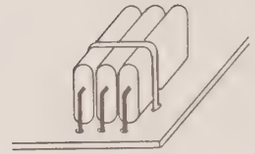

C3, C4 & C5
SUBSTITUTE
PARTS MOUNTING

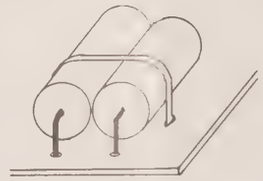

C1, C2
.1μf
6KV
STANDARD
MOUNTING

3. APPLY RTV AS SHOWN.
   BEND & CLIP CAPACITOR LEADS TO THE DIMENSION SHOWN AND SOLDER.
2. MOUNT AS SHOWN WITH LEADS CLOSEST TO PC BOARD INSPECTION TO VERIFY COMPONENTS PRIOR TO SOLDERING.
1. DETAILS SHOWN APPLY TO SUBSTITUTE C1 & C2 CAPACITORS ONLY.

NOTES:

| QTY | IDENTIFYING NUMBER | DESCRIPTION | CODE IDENT | ITEM |
|---|---|---|---|---|

LIST OF MATERIALS

| | | | |
|---|---|---|---|
| | | UNLESS OTHERWISE SPECIFIED DIMENSIONS ARE IN INCHES | CONTRACT NUMBER |
| | | DECIMALS: 1PL ± .1 2PL ± .02 | DR Tillie Evans 9-15-78 |
| | | 3PL ± .005 FRAC ± 1/64 | CHK |
| | | ANG ± 1° SURFACE FINISH ✓ | APPD |
| | | MATERIAL | APPD |
| | | | DESIGN ACTIVITY APPROVAL |
| NEXT ASSEMBLY | USED ON | SPEC NO. | CUSTOMER APPROVAL |
| APPLICATION | | FINISH | |

varian
MICROWAVE EQUIPMENT OPERATIONS
SANTA CLARA, CALIFORNIA

# ASSEMBLY HIGH VOLTAGE PWB (BOTTOM)

| SIZE | CODE IDENT NO. | | |
|---|---|---|---|
| C | 99313 | 112827 | J |

SCALE ~ SHEET 2 OF 2

SUPERSEDES

3440-09-03 11/72 PRINTED IN U.S.A.

| varian | MICROWAVE EQUIPMENT OPERATIONS | TITLE: HIGH VOLTAGE PWB (BOTTOM) | LM 112827 | REV J |
|---|---|---|---|---|
| CODE IDENT NO 99313 | APPROVAL W. E. Berg DATE 7/ /76 | [signature] 11/17/76 | | |

| APPLICATION | | | REVISION | | | | |
|---|---|---|---|---|---|---|---|
| NEXT ASSEMBLY | USED ON | EO | REV | DESCRIPTION | EO | DATE | APPROVED |
| D113094 | VZC-6961D6 | | A | INC. E.O. | PS-11340 | 7/13/76 | JHT |
| | | | B | INC. E.O. | PS-11419 | 8/17/76 | MHS |
| | | | C | ADDED ITEMS 16-21 | — | 10-26-76 | [illegible] |
| | | | D | INC E.O | PS 11712 | 2-2-77 | [illegible] |
| | | | E | INC E.O. | PS12044 | 7-8-77 | [illegible] |
| | | | F | INC E.O | PS12422 | 3-31-78 | [illegible] |
| | | | G | INC E.O. | PS12283 | 9-18-78 | [illegible] |
| | | | H | INC E.O. | PS12325 | 9-18-78 | [illegible] |
| | | | J | INC E.O. | PS12771 | 9-18-78 | [illegible] |

REVISION STATUS

| | | | | | | | | | | | | | | | | | | | | | | | | | | | |
|---|---|---|---|---|---|---|---|---|---|---|---|---|---|---|---|---|---|---|---|---|---|---|---|---|---|---|---|
| SHEET | | | | | | | | | | | | | | | | | | | | | | | | | | | |
| LTR | | | | | | | | | | | | | | | | | | | | | | | | | | | |
| SHEET | | | | | | | | | | | | | | | | | | | | | | | | | | | |
| LTR | | | | | | | | | | | | | | | | | | | | | | | | | | | |
| SHEET | | | | | | | | | | | | | | | | | | | | | | | | | | | |
| LTR | | | | | | | | | | | | | | | | | | | | | | | | | | | |

| varian | MICROWAVE EQUIPMENT OPERATIONS | HIGH VOLTAGE PWB (BOTTOM) | LM 112827 | REV J |
|---|---|---|---|---|

| ITEM NO | REF DES | DESCRIPTION | VARIAN PART NO. | MFG | MFG OR MS PART NO. | QTY/DASH NO. -00 | -01 | -02 | -03 |
|---|---|---|---|---|---|---|---|---|---|
| 1 | | FAB., H.V. PWB (BOTTOM) | C112826 | | | 1 | | | |
| 2 | | SCHEMATIC | D113101 | | | ref | | | |
| 3 | C1,2 | CAPACITOR, .1 µf, 6KV, 10% | 41-719305 | TRW | X675HV104960W2 | 2 | | | |
| 4 | C3,4,5 | CAPACITOR, .047 µf, 10KV | 41-719306 | TRW | X675HV4739100W2 | 3 | | | |
| 5 | | | | | | | | | |
| 6 | | | | | | | | | |
| 7 | | | | | | | | | |
| 8 | CR1,2,3 | DIODE | 66-393334 | SEMTECH | SMF10K | 3 | | | |
| 9 | | | | | | | | | |
| 10 | | CABLE TIE | 22-119654 | PANDUIT | SST1.51 | 2 | | | |
| 11 | E1-E8 | TERMINAL | 16-229946 | USECO | 2011B-1 | 8 | | | |
| 12 | L1 | CHOKE | B112929 | | | 1 | | | |
| 13 | R1 | RESISTOR, 27 OHM, 2W | 34-401227 | | RC42GF270J | 1 | | | |
| 14 | | SILICONE ADHESIVE/SEALANT | 88-298993 | DOW CORNING | RTV 3145 CLEAR | AR | | | |
| 15 | Z1 | TRANSIENT, SUPPRESSOR | 55-500160 | SIEMENS | B1-A350 | 1 | | | |
| 16 | | WIRE, BUS #22 AWG | 81-099922 | | | AR | | | |
| 17 | | SCREW, NYLON #10-32 x 1-1/2 LONG | 12-900635 | | | 1 | | | |
| 18 | | NUT, #10-32 3/8 x 1/8 Hex | 13-122060 | | | 1 | | | |
| 19 | | WASHER, PLAIN #10 | 14-122010 | | | 2 | | | |
| 20 | | LUG, SOLDER #10 | 16-199990 | SHAKEPROOF | 2104-10-00 | 1 | | | |
| 21 | | SLEEVING, INSUL. #22 | 88-494803 | BENTLEY HARRIS | BH1151-HB1 | AR | | | |

| REVISIONS | | | | | |
|---|---|---|---|---|---|
| ZONE | LTR | DESCRIPTION | EO | DATE | APPROVED |
| | A | REVISED PER ARTWORK CHG | — | 7-21-76 | |
| | B | [illegible] | PS11393 PS11395 | 9-3-76 | |
| | C | ADDED E10-E14 REVISED T1 HOOK-UP | — | 10-26-76 | |
| | D | ADDED -01 | PS12022 | 6-8-77 | |
| | E | INC E.O. | PS12270 | 9-14-78 | |
| | F | INC E.O. | PS12327 | 9-14-78 | |
| | G | INC E.O | PS12457 | 9-14-78 | |
| | H | INC E.O. | PS12606 | 9-9-78 | |

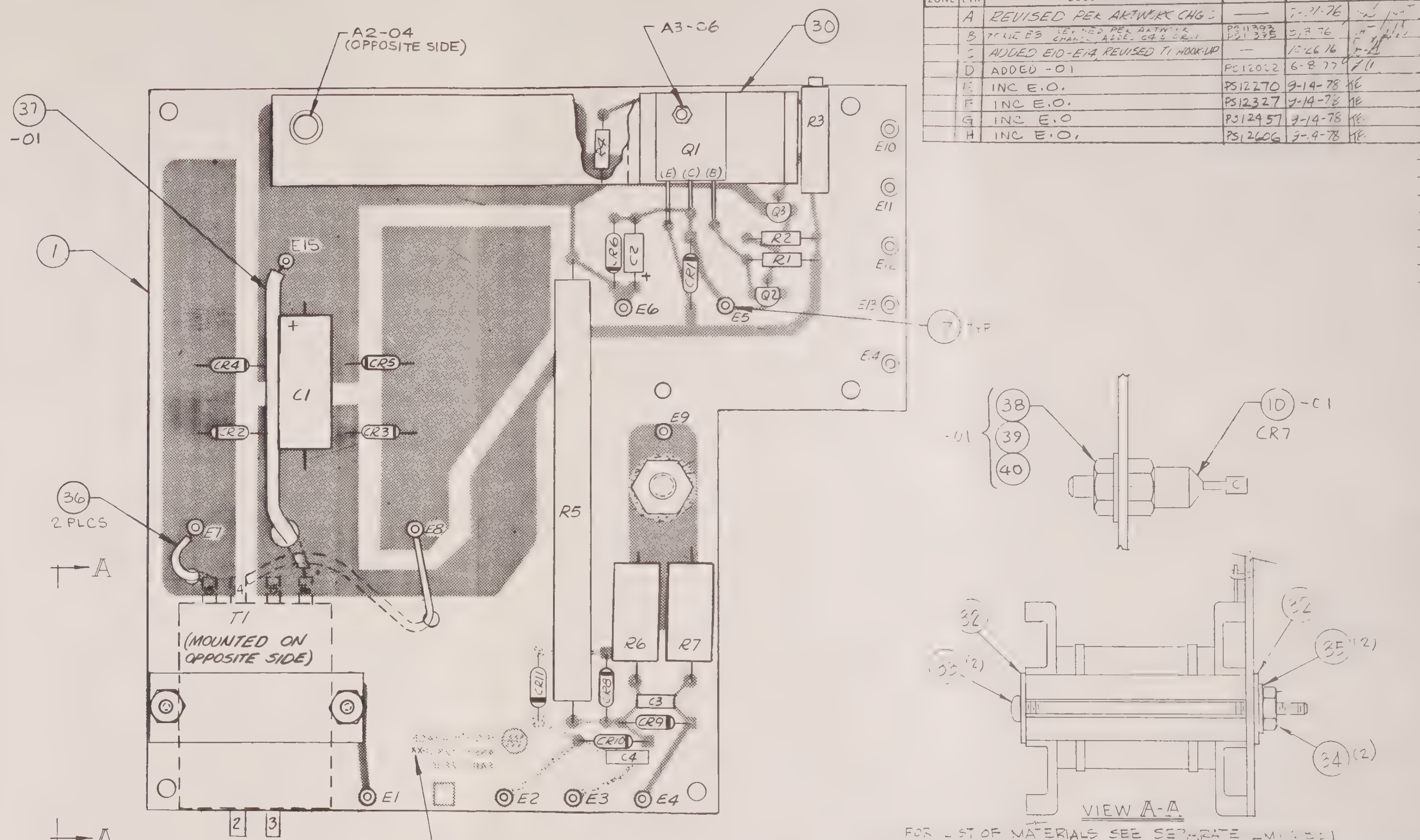


FOR LIST OF MATERIALS SEE SEPARATE LM

| QTY | IDENTIFYING NUMBER | DESCRIPTION | CODE IDENT | ITEM |
|---|---|---|---|---|

LIST OF MATERIALS

3 MARK CURRENT REVISION LETTER OF ASSY (OPPOSITE SIDE).
2. ASSEMBLE USING HARDWARE DWG 110625
1. ASSEMBLE/ VARIAN WORKM [illegible] STD 87-800-192.
NOTES:

| NEXT ASSEMBLY | USED ON |
|---|---|
| [illegible] | [illegible] |
| APPLICATION | |

UNLESS OTHERWISE SPECIFIED DIMENSIONS ARE IN INCHES
DECIMALS: 1PL ± .1 2PL ± .02
3PL ± .005 FRAC ± 1/64
ANG ± 1 SURFACE FINISH ✓
MATERIAL
SPEC NO
FINISH

CONTRACT NUMBER
DR F.GAMBLE 6-11-76
CHK [illegible] -4-76
APPD [illegible] 11/4/76
APPD [illegible] 7/5/76
DESIGN ACTIVITY APPROVAL
CUSTOMER APPROVAL

varian — MICROWAVE EQUIPMENT OPERATIONS, SANTA CLARA, CALIFORNIA

ASSEMBLY HIGH VOLTAGE PWB (TOP)

SIZE C | CODE IDENT NO 97313 | 112831 | H
SCALE 2:1 | SHEET 1 OF 1
SUPERSEDES

3440-09-03 11/72 PRINTED IN U.S.A.

| varian | MICROWAVE EQUIPMENT OPERATIONS | TITLE: HIGH VOLTAGE PWB (TOP) | LM 112831 | REV H |
|---|---|---|---|---|
| CODE IDENT NO 99313 | APPROVAL W.T. [illegible] DATE 7/[illegible]/76 | [illegible] 11/15/76 | | |

| APPLICATION | | |
|---|---|---|
| NEXT ASSEMBLY | USED ON | EO |
| D113094 | VEC-696106 | |
| | | |
| | | |
| | | |

REVISION

| REV | DESCRIPTION | EO | DATE | APPROVED |
|---|---|---|---|---|
| A | INC. E.O. | PS-11342 | 7/13/76 | JHT |
| B | INC. E.O. | PS-11395<br>PS-11393 | 8/4/76<br>8/2/76 | JHT [illegible] |
| C | ITEM 17 WAS QTY 9 | — | 10-26-76 | [illegible] |
| D | ADDED -01 | PS12022 | 6-8-77 | L.A. |
| E | INC. E.O. | PS-12270 | 9/14/78 | MS |
| F | INC. E.O. | PS-12327 | 9/14/78 | MS |
| G | INC. E.O. | PS-12457 | 9/14/78 | MS |
| H | INC. E.O. | PS-12606 | 9/14/78 | MS |

REVISION STATUS

| | | | | | | | | | | | | | | | | | | | | | | | | | | |
|---|---|---|---|---|---|---|---|---|---|---|---|---|---|---|---|---|---|---|---|---|---|---|---|---|---|---|
| SHEET | | | | | | | | | | | | | | | | | | | | | | | | | | |
| LTR | | | | | | | | | | | | | | | | | | | | | | | | | | |
| SHEET | | | | | | | | | | | | | | | | | | | | | | | | | | |
| LTR | | | | | | | | | | | | | | | | | | | | | | | | | | |
| SHEET | | | | | | | | | | | | | | | | | | | | | | | | | | |
| LTR | | | | | | | | | | | | | | | | | | | | | | | | | | |

varian | MICROWAVE EQUIPMENT OPERATIONS | HIGH VOLTAGE PWB (TOP) | LM 112831 | REV H

| ITEM NO | REF DES | DESCRIPTION | VARIAN PART NO. | MFG | MFG OR MS PART NO. | QTY/DASH NO. -00 | -01 | -02 | -03 |
|---|---|---|---|---|---|---|---|---|---|
| 1 | | FABRICATION, H.V. PWB | C112830-00 | | | 1 | 1 | | |
| 2 | | SCHEMATIC | D113101 | | | ref | - | | |
| 3 | C1 | CAPACITOR, ELECT., 100 µf, 20V | 41-506129 | SPRAGUE | 600D107G020DD4 | 1 | 1 | | |
| 4 | C2 | CAPACITOR, TANT., 1 µf, 50V, 10% | 41-606802 | SPRAGUE | CS13BG105K | 1 | 1 | | |
| 5 | C3,C4 | CAPACITOR, CERAMIC, .1 µf, 100V | 41-229952 | | CK06BX104K | 2 | 2 | | |
| 6 | | SCHEMATIC | D129103 | | | - | ref | | |
| 7 | | | | | | | | | |
| 8 | CR1,6 | DIODE, ZENER, 10V | 66-393302 | SEMTECH | SX10 | 2 | 2 | | |
| 9 | CR2-5 | DIODE | 66-304936 | | 1N4936 | 4 | 4 | | |
| 10 | CR7 | DIODE, ZENER, 110V | 66-313007 | | 1N3007A | - | 1 | | |
| 11 | CR8,10, CR11 | DIODE, SIGNAL | 66-320914 | | 1N914B | 3 | 3 | | |
| 12 | CR9 | DIODE, ZENER, 110V | 66-393303 | SEMTECH | SX110 | 1 | 1 | | |
| 13 | | | | | | | | | |
| 14 | | | | | | | | | |
| 15 | | | | | | | | | |
| 16 | | | | | | | | | |
| 17 | | | | | | | | | |
| 18 | Q1 | TRANSISTOR, NPN | 62-905979 | | 2N5979 | 1 | 1 | | |
| 19 | Q2 | TRANSISTOR, PNP | 62-920019 | MOTOROLA | MPS A56 | 1 | 1 | | |
| 20 | Q3 | TRANSISTOR, NPN | 62-920018 | MOTOROLA | MPS A06 | 1 | 1 | | |
| 21 | | | | | | | | | |

| varian | MICROWAVE EQUIPMENT OPERATIONS | HIGH VOLTAGE PWB (TOP) | LM 112831 | REV H |
|---|---|---|---|---|

| ITEM NO | REF DES | DESCRIPTION | VARIAN PART NO. | MFG | MFG OR MS PART NO. | QTY/DASH NO. | | | |
|---|---|---|---|---|---|---|---|---|---|
| | | | | | | -00 | -01 | -02 | -03 |
| 22 | R1,4 | RESISTOR, 499 OHM, 1/8W, 1% | 31-610241 | | RN55C4990F | 2 | 2 | | |
| 23 | R2 | RESISTOR, 200 OHM, 1/4W, 5% | 32-301320 | | RC07GF201J | 1 | 1 | | |
| 24 | R3 | RESISTOR, VAR., 500 OHM, CERMET | 36-792216 | BOURNS | 3006P-L-501 | 1 | 1 | | |
| 25 | R5 | RESISTOR, 10M, 7-1/2W, 1% | 31-387240 | CADDOCK | MG780 | 1 | 1 | | |
| 26 | R6 | RESISTOR, 220 OHM, 2W, 5% | 34-401322 | | RC42GF221J | 1 | 1 | | |
| 27 | R7 | RESISTOR, 100 OHM, 2W, 5% | 34-401310 | | RC42GF101J | 1 | 1 | | |
| 28 | T1 | TRANSFORMER, HEATER & BIAS SUPPLY | C112926 | | | 1 | 1 | | |
| 29 | | | | | | | | | |
| 30 | | HEATSINK, TRANSISTOR | B113222 | | | 1 | 1 | | |
| 31 | | | | | | | | | |
| 32 | | TRANSFORMER CLAMP | B113095-00 | | | 2 | 2 | | |
| 33 | | SCREW, 4-40 x 2 PAN PH | 12-222004-30 | | | 2 | 2 | | |
| 34 | | NUT, 4-40 | 13-102004 | | | 2 | 2 | | |
| 35 | | LOCKWASHER #4 | 14-317104 | | | 2 | 2 | | |
| 36 | | WIRE, TEF., INSUL., "EE", #24AWG, WHT | 81-288799 | | | AR | AR | | |
| 37 | | WIRE, HI-VOLTAGE #20 AWG, WHT | 81-259759 | | | - | AR | | |
| 38 | | WASHER, PLAIN, #10 | 14-122010 | | | - | 1 | | |
| 39 | | WASHER, LOCK, #10 | 14-202010 | | | - | 1 | | |
| 40 | | NUT, #10 | 13-102060 | | | - | 1 | | |
| | | | | | | | | | |
| | | | | | | | | | |

| ZONE | LTR | DESCRIPTION | EO | DATE | APPR |
|---|---|---|---|---|---|
| | A | ADDED TRACE FROM R4 TO R6 TO CONFORM TO ARTWORK CHANGE, ADDED ITEM 8 | | 6/29/76 | JHT/ |
| | B | ADDED ITEM 20 & NOTE 3 | — | 10-26-76 | |
| | C | INC E.O | PS12051 | 7-8-77 | |
| | D | INC E.O. | PS12606 | 9-14-78 | |

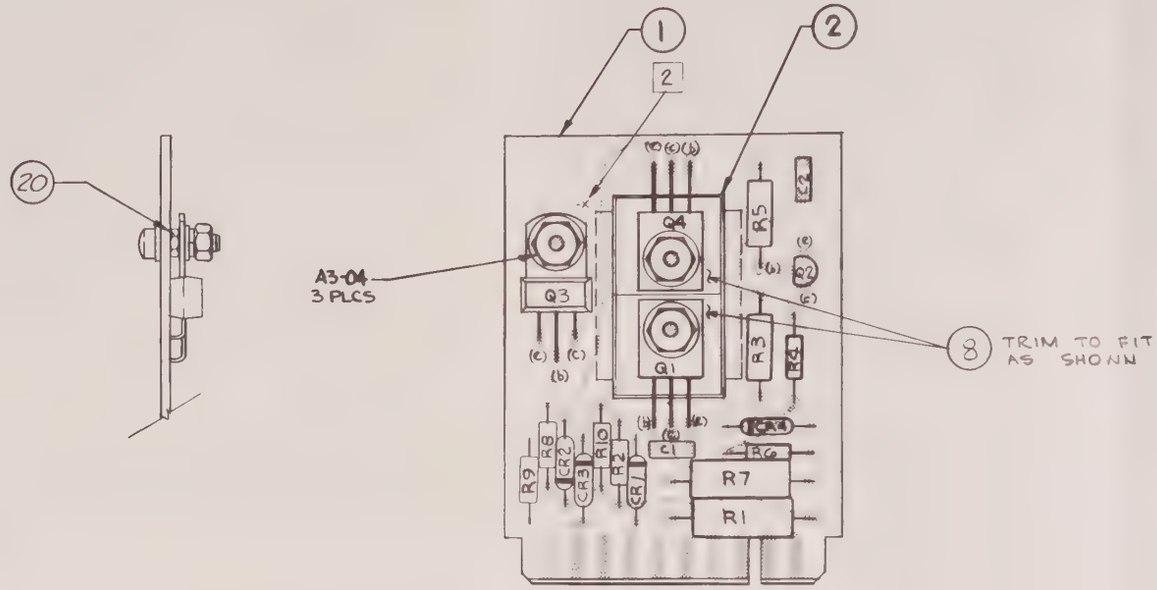


SEE SEPERATE PARTS LIST LM 112835

| QTY | IDENTIFYING NUMBER | DESCRIPTION | CODE IDENT | ITEM |
|---|---|---|---|---|

LIST OF MATERIALS

3. ASSEMBLY USING HARDWARE/DWG 110625.

2. MARK CURRENT REVISION LETTER OF ASSEMBLY.

1. ASSEMBLE/VARIAN WORKMANSHIP STD 87-800-192.

NOTES:

| | |
|---|---|
| D113094 | VZC-6961D6 |
| NEXT ASSEMBLY | |
| APPLICATION | |

UNLESS OTHERWISE SPECIFIED DIMENSIONS ARE IN INCHES

CONTRACT NUMBER

| | | |
|---|---|---|
| | F. GAMBLE | 6-2-76 |
| | J. Day | 6-3-76 |
| | | 11/15/76 |
| | W I Bey | 7/27/78 |

varian

MICROWAVE EQUIPMENT OPERATIONS
SANTA CLARA, CALIFORNIA

ASSEMBLY
CONVERTER PWB

| SIZE | CODE IDENT NO | | |
|---|---|---|---|
| C | 99313 | 112835 | D |

SCALE 2X SHEET 1 OF 1

SUPERSEDES

112835

| varian | MICROWAVE EQUIPMENT OPERATIONS | TITLE: ASSEMBLY, CONVERTER PWB | LM 112835 | REV D |
|---|---|---|---|---|
| CODE IDENT NO. 99313 | APPROVAL [illegible] DATE 7/[illegible]/76 | [illegible] 11/14/76 | | |

| APPLICATION | | | REVISION | | | | |
|---|---|---|---|---|---|---|---|
| NEXT ASSEMBLY | USED ON | EO | REV | DESCRIPTION | EO | DATE | APPROVED |
| | | | A | INC. E.O. | PS-11341 | 7/13/76 | JHT |
| | | | B | REVISED | | 10/6/76 | MHS |
| | | | C | INC. E.O. | PS-12051 | 7/8/77 | MHS |
| | | | D | INC. E.O. | PS-12606 | 9/14/78 | MHS |

REVISION STATUS

| | | | | | | | | | | | | | | | | | | | | | | | | | | | |
|---|---|---|---|---|---|---|---|---|---|---|---|---|---|---|---|---|---|---|---|---|---|---|---|---|---|---|---|
| SHEET | | | | | | | | | | | | | | | | | | | | | | | | | | | |
| LTR | | | | | | | | | | | | | | | | | | | | | | | | | | | |
| SHEET | | | | | | | | | | | | | | | | | | | | | | | | | | | |
| LTR | | | | | | | | | | | | | | | | | | | | | | | | | | | |
| SHEET | | | | | | | | | | | | | | | | | | | | | | | | | | | |
| LTR | | | | | | | | | | | | | | | | | | | | | | | | | | | |

| varian | MICROWAVE EQUIPMENT OPERATIONS | ASSEMBLY, CONVERTER PWB | LM 112835 | REV D |
|---|---|---|---|---|

| ITEM NO | REF DES | DESCRIPTION | VARIAN PART NO. | MFG | MFG OR MS PART NO. | QTY/DASH NO. -00 | -01 | -02 | -03 |
|---|---|---|---|---|---|---|---|---|---|
| 1 | | FABRICATION, PWB | C112834 | | | 1 | | | |
| 2 | | HEATSINK, DUAL TRANSISTOR | 66-899401 | AHAM | 368 | 1 | | | |
| 3 | C1,2 | CAPACITOR, .22 uf, 50V, 20% | 41-228023 | ERIE | 8131-050-651-224 | 2 | | | |
| 4 | | | | | | | | | |
| 5 | | | | | | | | | |
| 6 | CR1,4 | DIODE | 66-304936 | | 1N4936 | 2 | | | |
| 7 | CR2,3 | DIODE, SIGNAL | 66-320914 | | 1N914B | 2 | | | |
| 8 | | INSULATOR | 62-899937 | THERMALLOY | 43-77-2 | 2 | | | |
| 9 | Q1,4 | TRANSISTOR, PNP | 62-906407 | | 2N6407 | 2 | | | |
| 10 | Q2 | TRANSISTOR, NPN | 62-920018 | MOTOROLA | MPSA06 | 1 | | | |
| 11 | Q3 | TRANSISTOR, PNP | 62-920016 | MOTOROLA | MPSU56 | 1 | | | |
| 12 | | | | | | | | | |
| 13 | R1,7 | RESISTOR, W.W., 2.5, 3W, 1% | 31-599752 | DALE | RS2B | 2 | | | |
| 14 | R2,6,10 | RESISTOR, COMP., 51, 1/4W, 5% | 32-301251 | | RC07GF510J | 3 | | | |
| 15 | R3,5 | RESISTOR, COMP., 10, 1W, 5% | 33-301210 | | RC32GF100J | 2 | | | |
| 16 | R4 | RESISTOR, COMP., 1K, 1/4W, 5% | 32-301410 | | RC07GF102J | 1 | | | |
| 17 | R8 | RESISTOR, COMP., 5.1K, 1/4W, 5% | 32-301451 | | RC07GF512J | 1 | | | |
| 18 | R9 | RESISTOR, COMP., 10K, 1/4W, 5% | 32-301510 | | RC07GF103J | 1 | | | |
| 19 | | | | | | | | | |
| 20 | | NUT, 4-40 HEX | 13-102004 | | | 1 | | | |
| 21 | | SCHEMATIC | C112832 | | | REF | | | |

| REVISIONS | | | | | |
|---|---|---|---|---|---|
| ZONE | LTR | DESCRIPTION | EO | DATE | APPROVED |
| | A | ADD CONNECTION FROM JCT J2-K & R4 TO JCT J2-H & RG; ADDED C1, E1-E5 | | 6/29/76 | JHT |
| | B | ADDED C2 & R1 | | 10-25-76 | |
| | C | INC E.O. | PS12606 | 9-14-76 | TE |

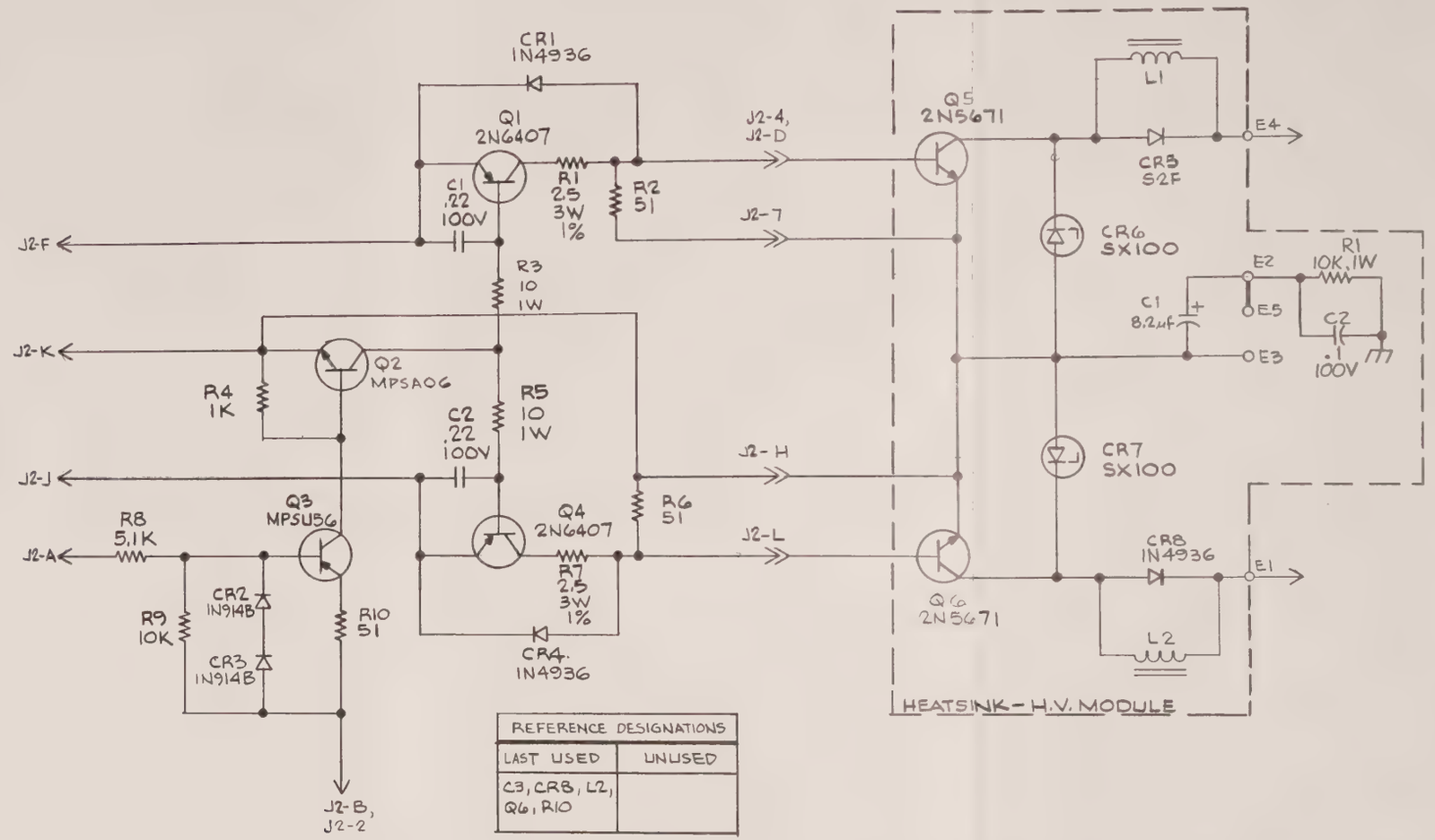


| REFERENCE DESIGNATIONS | |
|---|---|
| LAST USED | UNUSED |
| C3, CR8, L2, Q6, R10 | |

| QTY | IDENTIFYING NUMBER | DESCRIPTION | CODE IDENT | ITEM |
|---|---|---|---|---|
| | | LIST OF MATERIALS | | |

| | |
|---|---|
| C112835 | VZC-6961D6 |
| NEXT ASSEMBLY | USED ON |
| APPLICATION | |

UNLESS OTHERWISE SPECIFIED DIMENSIONS ARE IN INCHES
DECIMALS: 1PL ± .1 2PL ± .02
3PL ± .005 FRAC ± 1/64
ANG ± 1° SURFACE FINISH ✓
MATERIAL
SPEC NO
FINISH

| CONTRACT NUMBER | | |
|---|---|---|
| DR | F. GAMBLE | 8-27-76 |
| CHK | | 9-2-76 |
| APPD | | 11/5/76 |
| APPD | | 8/17/76 |
| DESIGN ACTIVITY APPROVAL | | |
| CUSTOMER APPROVAL | | |

varian
MICROWAVE EQUIPMENT OPERATIONS
SANTA CLARA, CALIFORNIA

# SCHEMATIC CONVERTER PWB

| SIZE | CODE IDENT NO | |
|---|---|---|
| C | 99313 | 112832 C |
| SCALE ~ | | SHEET 1 OF 1 |

SUPERSEDES

NOTES:
1. UNLESS OTHERWISE SPECIFIED: ALL RESISTORS ARE IN OHMS, ¼W COMP, 5%, AND ALL CAPACITORS ARE IN MICROFARADS

3440-09-03 11/72 PRINTED IN U.S.A.

112832

| | | | | |
|---|---|---|---|---|
| M | INC E.O. | PS12761 | 9-25-78 | TE |
| N | INC E.O. | PS12762 | 9-25-78 | KE |

REVISIONS

| ZONE | LTR | DESCRIPTION | EO | DATE | APPROVED |
|---|---|---|---|---|---|
| | G | INC E.O. | PS12148 | 10-27-77 | [illegible] |
| | H | INC E.O. PS12202 | PS122.5 | 11-1-77 | [illegible] |
| | J | INC E.O. | PS12248 | 1-10-78 | [illegible] |
| | K | INC E.O. | PS12354A | 3-30-78 | TE/[illegible] |
| | L | INC E.O. | PS12646 | 6-19-78 | [illegible] |

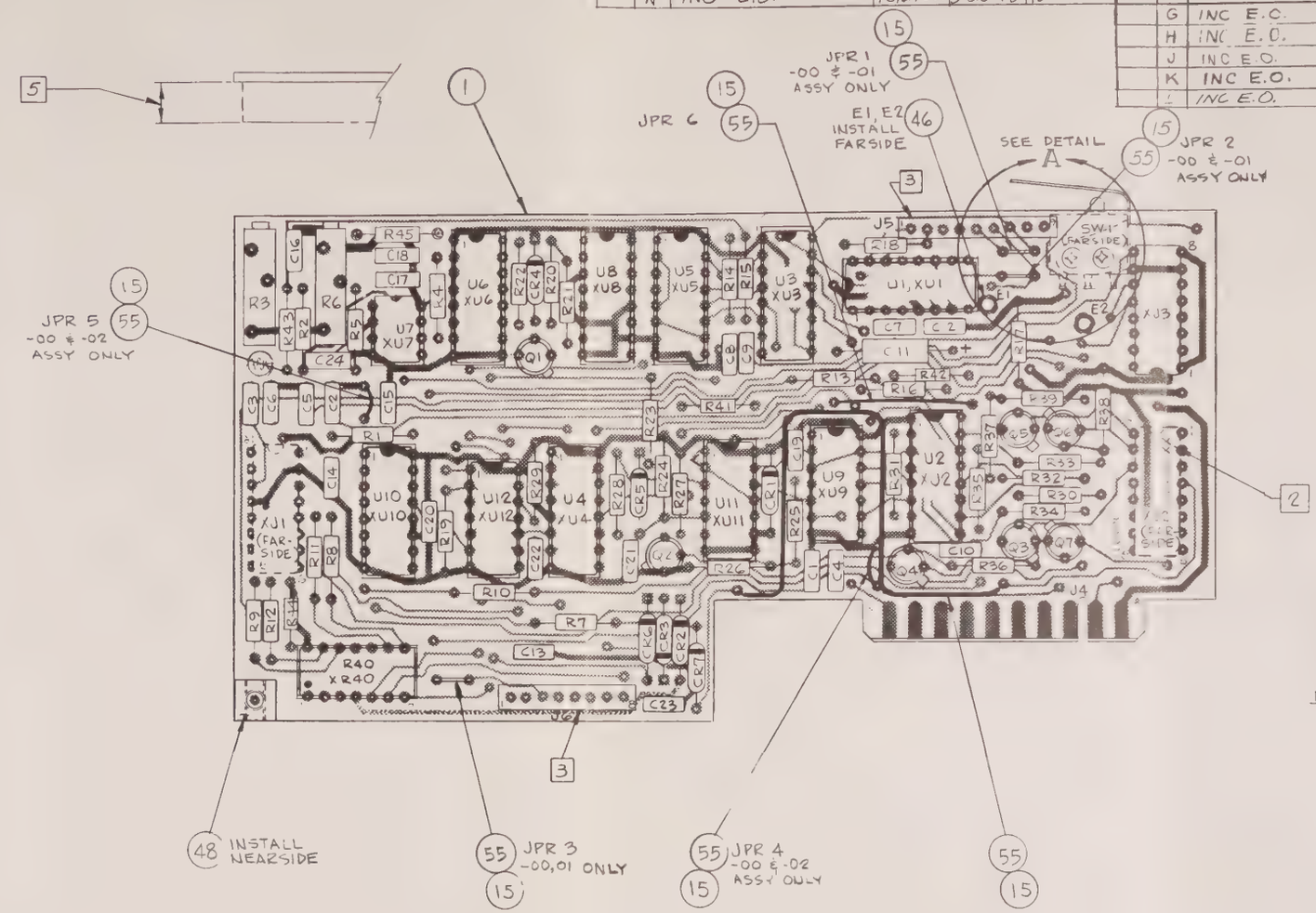


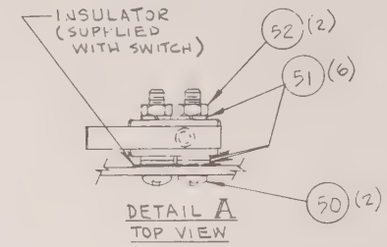


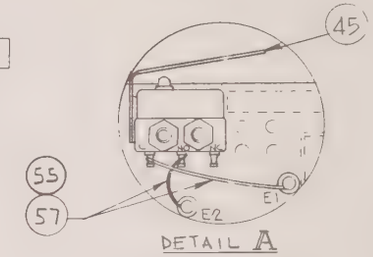


NOTE: REAR VIEW OF SWITCH IS SHOWN FOR WIRING PURPOSES. WIRE AS FOLLOWS:

| FROM | TO |
|---|---|
| SW1-C | E1 |
| SW1-NO | E2 |

CONNECT WITH SERVICE LOOP PER WS602-PARA 3

SEE SEPARATE LIST OF MATERIAL — LM 112839

| QTY | IDENTIFYING NUMBER | DESCRIPTION | CODE IDENT | ITEM |
|---|---|---|---|---|

LIST OF MATERIALS

6 BUILD TO LOGIC PCB AS IT IS AND HAVE JUMPER # 3 INSTALLED AS REQUIRED IN HIGHER LEVEL

5 MAX HEIGHT OF COMPONENTS CAN NOT EXCEED 5/16" ABOVE PCB TOP SURFACE.

4. -70 VERSION IS IDENTICAL TO -00 EXCEPT DELETE JUMPERS 1 THRU 5.

3 MOUNT SHORT PINS IN PCB FOR J5 & J6

2 MARK CURRENT REVISION LETTER OF ASSEMBLY.

1. ASSEMBLE/VARIAN WORKMANSHIP STD. 87-800-192.

NOTES:

| NEXT ASSEMBLY | USED ON |
|---|---|
| D113860 | |
| E112822 | VZC-6961D6 |

APPLICATION

UNLESS OTHERWISE SPECIFIED DIMENSIONS ARE IN INCHES

DECIMALS: 1PL ± .1 2PL ± .02

3PL ± .005 FRAC ± 1 64

ANG ± 1° SURFACE FINISH ✓

MATERIAL

SPEC NO.

FINISH

CONTRACT NUMBER

| | | |
|---|---|---|
| DR | F GAMBLE | 5-19-76 |
| CHK | [illegible] | 5-[illegible]-76 |
| APPD | [illegible] | 11/[illegible] |
| APPD | W Berg | 7/1-76 |

DESIGN ACTIVITY APPROVAL

CUSTOMER APPROVAL

varian — MICROWAVE EQUIPMENT OPERATIONS SANTA CLARA, CALIFORNIA

# ASSEMBLY LOGIC PWB

| SIZE | CODE IDENT NO. | | |
|---|---|---|---|
| C | 99313 | 112839 | N |

SCALE 2:1 SHEET 1 OF 1

SUPERSEDES

3440-09-03 11/72 PRINTED IN U.S.A.

112839

varian | MICROWAVE EQUIPMENT OPERATIONS | TITLE: LOGIC PWB ASSY | LM 112839 | REV N

CODE IDENT NO. 99313 | DR. M Smith DATE 4-15-77 | CHK L Ado DATE 4-15-77 | APPD W I Bay DATE 4/15/77 | APPD DATE

APPLICATION

| DASH NO | NEXT ASSEMBLY | MODEL NO |
|---|---|---|
| -00 | D112822 | |
| -03 | D112822 | |
| -04 | D113860 | |

| VERSION | DESCRIPTION OF END USE |
|---|---|
| -00 | NO REMOTE CONTROL OR FAULT RECYCLE |
| -01 | REMOTE CONTROL, NO FAULT RECYCLE |
| -02 | NO REMOTE CONTROL, WITH FAULT RECYCLE |
| -03 | REMOTE CONTROL AND FAULT RECYCLE |
| -04 | REMOTE CONTROL AND FAULT RECYCLE |
| -70 | COMMON VERSION. SAME AS -00 EXCEPT LESS JUMPERS 1 THRU 5. |

REVISION

| REV | DESCRIPTION | EO | APPROVED | DATE |
|---|---|---|---|---|
| D | INC. E.O. | PS-11820 | MHS | 4/14/77 |
| E | INC. E.O.'s | PS-11804 PS-11881 | MHS | 6/3/77 |
| F | INC E.O. | PS-12030 | MHS/JJD. | 6/27/77 |
| G | INC E.O. | PS-12148 | [illegible] | 10/27/77 |
| H | INC E.O. | PS 12215 | [illegible] | 11/1/77 |
| J | INC E.O. | PS12248 | [illegible] | 1/10/78 |
| K | INC E.O. | PS12354A | [illegible] | 3/31/78 |
| L | INC. E.O. | PS12646 | JJD/JHT | 6-19-78 |
| M | INC E.O. | PS12761 | TE | 9-25-78 |
| N | INC E.O. | PS12762 | TE | 9-25-78 |

varian | MICROWAVE EQUIPMENT OPERATIONS | LOGIC PWB ASSY | LM 112839 | REV N

| ITEM NO | REF DES | DESCRIPTION | VARIAN PART NO | MFG | MFG OR MS PART NO | QTY/DASH NO -01 | -01 | -02 | -03 | -04 | -05 | -06 | -07 | -08 | -09 | -10 | -11 | -12 | -13 | -14 | -15 | -16 | -17 | -18 | -19 | -20 | -21 | -22 | -23 | -24 | -25 | -26 | -27 | -28 | -29 |
|---|---|---|---|---|---|---|---|---|---|---|---|---|---|---|---|---|---|---|---|---|---|---|---|---|---|---|---|---|---|---|---|---|---|---|---|
| 1 | | FABRICATION, PWB. | C112838 | | | 1 | 1 | 1 | 1 | 1 | | | | | | | | | | | | | | | | | | | | | | | | | |
| 2 | | SCHEMATIC | 112836 | | | | | | | | | | | | | | | | | | | | | | | | | | | | | | | | |
| 3 | | | | | | | | | | | | | | | | | | | | | | | | | | | | | | | | | | | |
| 4 | C1-10, 12-21,23 | CAPACITOR, CERAMIC, .01μf, 200V | 41-229951 | | CK06BX103K | 21 | 21 | 21 | 21 | 21 | | | | | | | | | | | | | | | | | | | | | | | | | |
| 5 | C11 | CAPACITOR, TANT., 10 μf, 20V | 41-609886 | | CS13BE106M | 1 | 1 | 1 | 1 | 1 | | | | | | | | | | | | | | | | | | | | | | | | | |
| 6 | C22 | CAPACITOR, CER., .1 μf, 100V | 41-229952 | | CK06BX104K | 1 | 1 | 1 | 1 | 1 | | | | | | | | | | | | | | | | | | | | | | | | | |
| 7 | C24 | CAPACITOR, CER., .1μf, 100V (NOM. VALUE) | D.I.T. 41-229952 | | CK06BX104K | / | / | / | / | / | | | | | | | | | | | | | | | | | | | | | | | | | |
| 8 | CR1 | DIODE, BREAKDOWN | 66-305244 | | 1N5244 | 1 | 1 | 1 | 1 | 1 | | | | | | | | | | | | | | | | | | | | | | | | | |
| 9 | CR2, 3, CR5-7 | DIODE, SIGNAL | 66-320914 | | 1N914B | 5 | 5 | 5 | 5 | 5 | | | | | | | | | | | | | | | | | | | | | | | | | |
| 10 | CR4 | DIODE, BREAKDOWN | 66-305239 | | 1N5239 | 1 | 1 | 1 | 1 | 1 | | | | | | | | | | | | | | | | | | | | | | | | | |
| 11 | | | | | | | | | | | | | | | | | | | | | | | | | | | | | | | | | | | |
| 12 | J5 | CONNECTOR, WAFER - 9 PIN | 51-407119 | MOLEX | 22-03-2091 | 1 | 1 | 1 | 1 | 1 | | | | | | | | | | | | | | | | | | | | | | | | | |
| 13 | J6 | CONNECTOR, WAFER - 8 PIN | 51-407118 | MOLEX | 22-03-2081 | 1 | 1 | 1 | 1 | 1 | | | | | | | | | | | | | | | | | | | | | | | | | |
| 14 | | | | | | | | | | | | | | | | | | | | | | | | | | | | | | | | | | | |
| 15 | | SLEEVING, #22 | 88-494803 | BENTLEY-HARRIS | BH11151-HB1 | AR | AR | AR | AR | AR | | | | | | | | | | | | | | | | | | | | | | | | | |
| 16 | | | | | | | | | | | | | | | | | | | | | | | | | | | | | | | | | | | |
| 17 | Q1-7 | TRANSISTOR, NPN | 62-912222 | | 2N2222A | 7 | 7 | 7 | 7 | 7 | | | | | | | | | | | | | | | | | | | | | | | | | |
| 18 | R4 | RESISTOR, COMP., 10K, 1/4W, 5% (NOM. VALUE) | D.I.T. 32-301510 | | RC07GF103J | / | / | / | / | / | | | | | | | | | | | | | | | | | | | | | | | | | |
| 19 | R1, 2, 5, 42, 43 | RESISTOR, COMP., 100K, 1/4W, 5% | 32-301610 | | RC07GF104J | 7 | 7 | 7 | 7 | 7 | | | | | | | | | | | | | | | | | | | | | | | | | |
| 20 | R3, 6 | RESISTOR, VARIABLE, 10K | 36-792215 | | | 2 | 2 | 2 | 2 | 2 | | | | | | | | | | | | | | | | | | | | | | | | | |
| 21 | R7-16, 26, 35-39 | RESISTOR, COMP., 1K, 1/4W, 5% | 32-301410 | | RC07GF102J | 16 | 16 | 16 | 16 | 16 | | | | | | | | | | | | | | | | | | | | | | | | | |
| 22 | R17 | RESISTOR, COMP., 20 OHM, 1/4W, 5% | 32-301220 | | RC07GF200J | 1 | 1 | 1 | 1 | 1 | | | | | | | | | | | | | | | | | | | | | | | | | |
| 23 | R20 | RESISTOR, COMP. 6.8K, 1/4W, 5% | 32-301468 | | RC07GF682J | 1 | 1 | 1 | 1 | 1 | | | | | | | | | | | | | | | | | | | | | | | | | |
| 24 | R21 | RESISTOR, COMP., 10K, 1/4W, 5% | 32-301510 | | RC07GF103J | 1 | 1 | 1 | 1 | 1 | | | | | | | | | | | | | | | | | | | | | | | | | |
| 25 | R22, 24 | RESISTOR, COMP., 1 MEG, 1/4W, 5% | 32-301710 | | RC07GF105J | 2 | 2 | 2 | 2 | 2 | | | | | | | | | | | | | | | | | | | | | | | | | |
| 26 | R23, 28 | RESISTOR, COMP., 680 OHM 1/4W 5% | 32-301368 | | RC07GF681J | 2 | 2 | 2 | 2 | 2 | | | | | | | | | | | | | | | | | | | | | | | | | |
| 27 | R25, R30-34 | RESISTOR, COMP., 3.3K, 1/4W, 5% | 32-301433 | | RC07GF332J | 6 | 6 | 6 | 6 | 6 | | | | | | | | | | | | | | | | | | | | | | | | | |
| 28 | R29 | RESISTOR, COMP., 680K, 1/4W, 5% | 32-301668 | | RC07GF684J | 1 | 1 | 1 | 1 | 1 | | | | | | | | | | | | | | | | | | | | | | | | | |

varian | MICROWAVE EQUIPMENT OPERATIONS | LOGIC PWB ASSY | LM 112839 | REV N

| ITEM NO | REF DES | DESCRIPTION | VARIAN PART NO. | MFG | MFG OR MS PART NO | QTY/DASH NO -01 | -02 | -03 | -04 |
|---|---|---|---|---|---|---|---|---|---|
| 29 | R40 | RESISTOR, NETWORK, 100K | 31-400041 | ALLEN-BRADLEY | 314A104 | 1 | 1 | 1 | 1 |
| 30 | R41, 42 R44 | RESISTOR, COMP., 100K, 1/8W, 5% | 32-410110 | | RC05GF104J | 3 | 3 | 3 | 3 |
| 31 | R45 | RESISTOR, COMP., 51K, 1/4W, 5% | 32-301551 | | RC07GF513J | 1 | 1 | 1 | 1 |
| 32 | | | | | | | | | |
| 33 | U1, 4, 10 | I.C.-QUAD 3 STATE R/S LATCHES | 62-600684 | RCA | CD4044AE | 3 | 3 | 3 | 3 |
| 34 | U2, 3, 6 | I.C.-HEX BUFFER/INVERTER | 62-600032 | RCA | CD4049AE | 3 | 3 | 3 | 3 |
| 35 | U5 | I.C.-EXP. 8 INPUT OR GATE | 62-600685 | RCA | CD4048AE | 1 | 1 | 1 | 1 |
| 36 | U7 | DUAL OP AMP. | 62-601003 | T.I. | LM358N | 1 | 1 | 1 | 1 |
| 37 | U8 | I.C.-HEX INVERTER/BUFFER | 62-600686 | RCA | CD4502BE | 1 | 1 | 1 | 1 |
| 38 | U9 | I.C.-QUAD 2 INPUT NAND | 62-600006 | RCA | CD4011AE | 1 | 1 | 1 | 1 |
| 39 | U11 | I.C.-QUAD 2 INPUT NAND | 62-600687 | RCA | CD4093BE | 1 | 1 | 1 | 1 |
| 40 | U12 | I.C.-QUAD BILATERAL SWITCH | 62-600103 | RCA | CD4066AD | 1 | 1 | 1 | 1 |
| 41 | XU9, 11 XU 2 XR40 | SOCKET I.C. - 14 PIN | 54-634007 | SAE | CSA3100-14B | 4 | 4 | 4 | 4 |
| 42 | XU1-6, 8, XU10 XU12-3 | SOCKET I.C. - 16 PIN | 54-634008 | SAE | CSA3100-16B | 11 | 11 | 11 | 11 |
| 43 | XU7 | SOCKET I.C. - 8 PIN | 54-634092 | SAE | ISW3800-8-B | 1 | 1 | 1 | 1 |
| 44 | SW1 | SWITCH, SNAP-ACTION, SPDT | 71-429955 | MICROSWITCH | 11Sx21-T | 1 | 1 | 1 | 1 |
| 45 | | ACTUATOR | 71-999877 | MICROSWITCH | JX-40 | 1 | 1 | 1 | 1 |
| 46 | E1, E2 | TERMINAL, TURRET | 16-229946 | USECO | 2011B-1 | 2 | 2 | 2 | 2 |
| 47 | | | | | | | | | |
| 48 | | STANDOFF, SWAGE | 22-399800 | USECO | 1591B-11 | 1 | 1 | 1 | 1 |
| 49 | | | | | | | | | |
| 50 | | SCREW, PAN HD., PH. DR., 2-56 x 7/16 LG. | 12-221102-07 | | | 2 | 2 | 2 | 2 |
| 51 | | LOCKWASHER, SPLIT | 14-202002 | | | 6 | 6 | 6 | 6 |
| 52 | | NUT, HEX 2-56 | 13-104502 | | | 2 | 2 | 2 | 2 |
| 53 | | | | | | | | | |
| 54 | | | | | | | | | |
| 55 | JPR1-6 | WIRE, BUS, #22 AWG | 81-099922 | | | AR | AR | AR | AR |
| 56 | | | | | | | | | |

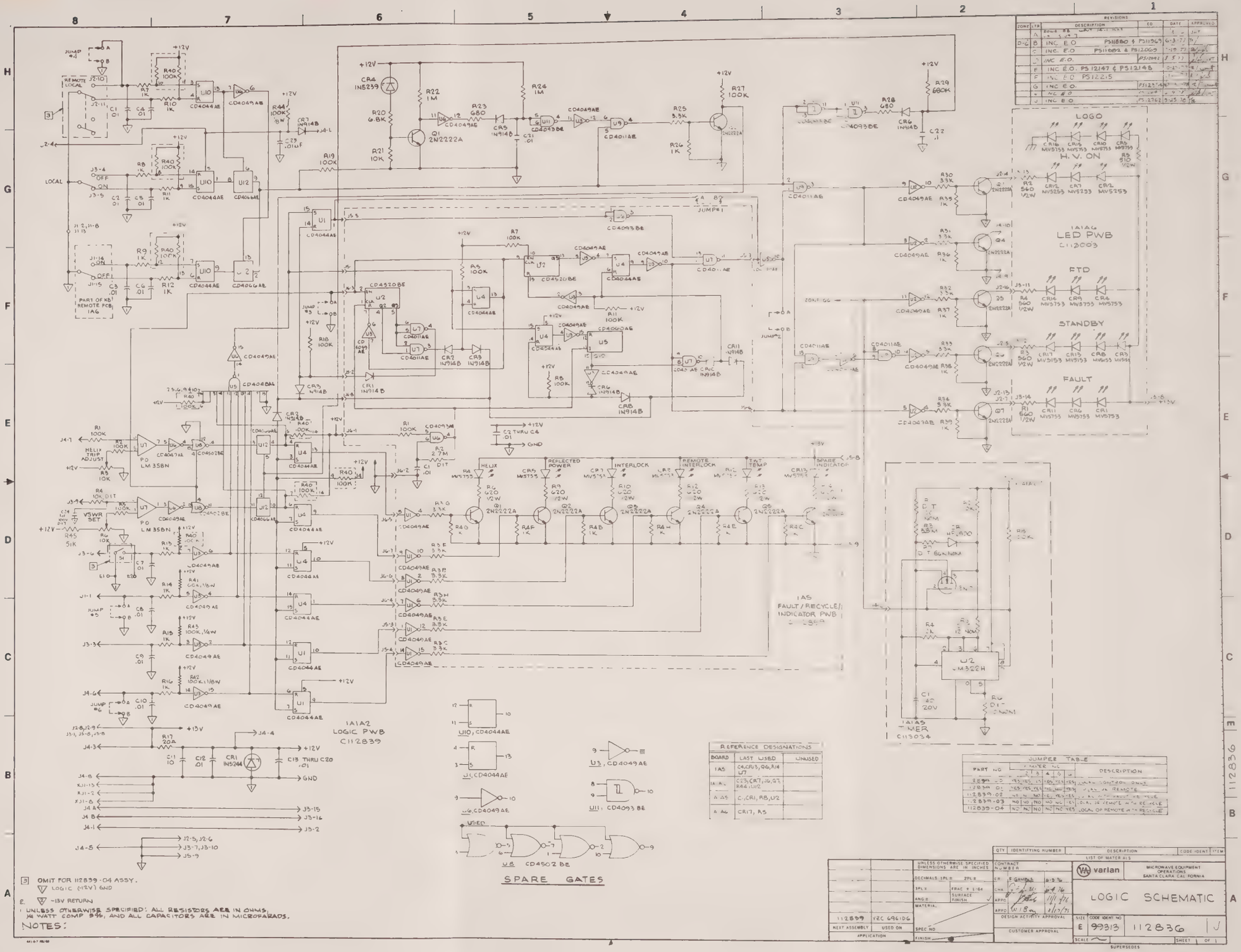

REVISIONS
ZONE | LTR | DESCRIPTION | EO | DATE | APPROVED
A | ZONE 8B SHIFT 14-1 NOT
B | INC. E.O. PS11880 & PS11969 | 6-3-77
C | INC. E.O. PS11882 & PS12069 | 7-19-77
D | INC. E.O. | PS12042 | 8-5-77
E | INC. E.O. PS12147 & PS12148 | 10-27-77
F | INC. E.O. PS12215
G | INC. E.O. | PS12354
H | INC. E.O.
J | INC. E.O. | PS12762 | 9-25-78
LOGO
H.V. ON
1A1A6
LED PWB
C113003
FTD
STANDBY
FAULT
1A1A2
LOGIC PWB
C112839
1A5
FAULT/RECYCLE/
INDICATOR PWB
1A1A5
TIMER
C113034
SPARE GATES
REFERENCE DESIGNATIONS
BOARD | LAST USED | UNUSED
1A5 | C4,CR13,Q6,R14 U7
1A1A2 | C23,CR17,J6,Q7 R44,U12
1A1A5 | C1,CR1,R8,U2
1A1A6 | CR17, R5
JUMPER TABLE
PART NO | 1 | 2 | 3 | 4 | 5 | 6 | DESCRIPTION
112839-01 | YES | YES | YES | NO | NO | YES | LOCAL OR REMOTE
112839-02 | NO | NO | NO | NO | NO | YES | LOCAL OR REMOTE WITH RECYCLE
112839-03 | NO | NO | NO | NO | NO | YES | LOCAL OR REMOTE WITH RECYCLE
112839-04 | NO | NO | NO | NO | NO | YES | LOCAL OR REMOTE WITH RECYCLE
3 OMIT FOR 112839-04 ASSY.
LOGIC (+12V) GND
2. -13V RETURN
1 UNLESS OTHERWISE SPECIFIED: ALL RESISTORS ARE IN OHMS, 1/4 WATT COMP 5%, AND ALL CAPACITORS ARE IN MICROFARADS.
NOTES:
QTY | IDENTIFYING NUMBER | DESCRIPTION | CODE IDENT | ITEM
LIST OF MATERIALS
UNLESS OTHERWISE SPECIFIED DIMENSIONS ARE IN INCHES
DECIMALS 1PL ± 2PL ±
SPLX FRAC ± 1/64
ANG ± SURFACE FINISH
MATERIAL
SPEC NO
FINISH
CONTRACT NUMBER
CR F. GAMBLE 6-5-76
CHK 6-4-76
APPD 11/1/76
APPD 2/17/76
DESIGN ACTIVITY APPROVAL
CUSTOMER APPROVAL
112839 | YZC 696106
NEXT ASSEMBLY | USED ON
APPLICATION
varian
MICROWAVE EQUIPMENT OPERATIONS
SANTA CLARA CALIFORNIA
LOGIC SCHEMATIC
SIZE E | CODE IDENT NO 99313 | 112836 | J
SCALE ~ | SHEET 1 OF 1
SUPERSEDES
112836

## INSTALLATION OF Q1 TIP35C

1. DRILL A #60 HOLE IN EACH TAB OF THE TRANSISTOR, (EMMITOR, BASE & COLLECTOR).
2. INSULATE TRANSISTOR MOUNTING SCREW USING A SHORT LENGTH OF SLEEVING OVER SCREW THRU HEATSINK.
3. USE BUSS WIRE TO MAKE THE CONNECTION FROM THE PCB TO THE EMITTER, BASE & COLLECTOR TABS OF THE TRANSISTOR.

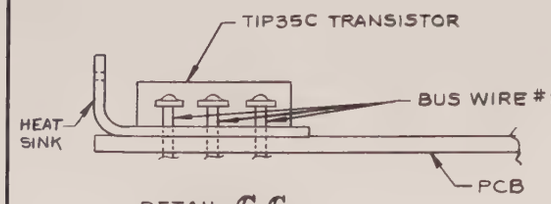


DETAIL C-C

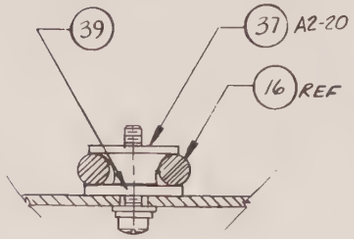


DETAIL A-A

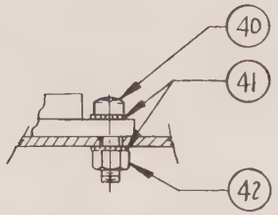


DETAIL B-B
TYP 4 PLCS

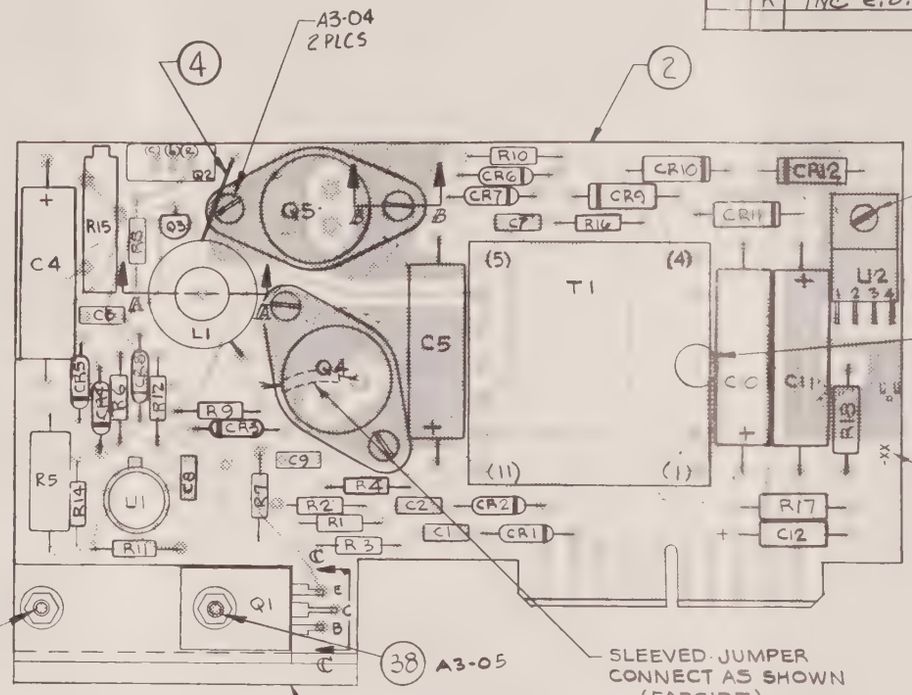


| REVISIONS | | | | | |
|---|---|---|---|---|---|
| ZONE | LTR | DESCRIPTION | EC | DATE | APP'D |
| | A | RELOCATED Q1, ITEM 3 CONFIGUERATION CHANGED, PICTURE CHANGED TO ARTWORK CHANGES | | 6/23/76 | JHT |
| | B | ADDED ITEMS 37 & 38, RELOCATED R17 & R18 | | 10-13-76 | |
| | C | ADDED ITEM 39 & DETAIL A-A | — | 11-8-76 | |
| | D | INC E.O. PS12053 | PS11900 | 7-11-77 | TE |
| | E | ADDED ITEM 43 | PS12183 | 10-19-77 | |
| | F | INC E.O. | PS12249 | 1-10-78 | |
| | G | INC E.O. | PS12423 | 3-31-78 | |
| | H | INC E.O. | PS12606 | 9-14-78 | TE |
| | J | INC E.O. | PS12673 | 9-14-78 | TE |
| | K | INC E.O. | PS12695 | 9-14-78 | TE |

SEE SEPARATE LIST OF MATERIALS - LM 112843

| QTY | IDENTIFYING NUMBER | DESCRIPTION | CODE IDENT | ITEM |
|---|---|---|---|---|
| LIST OF MATERIALS | | | | |

3. MARK CURRENT REV LETTER OF ASSY.
2. ASSEMBLE USING HARDWARE / DWG 110625.
1. ASSEMBLE/VARIAN WORKMANSHIP STD 87-800-192.

NOTES:

| | |
|---|---|
| E112822 | VEC-6961D6 |
| NEXT ASSEMBLY | USED ON |
| APPLICATION | |

UNLESS OTHERWISE SPECIFIED DIMENSIONS ARE IN INCHES
DEC MAS 1PL ± .1 2PL ± .
3PL ± .005 FRAC ± 1/64
ANG ± 1 SURFACE FINISH ✓
MATER'A
SPEC NO
FINISH

CONTRACT NUMBER

| | | |
|---|---|---|
| DR | F. GAMBLE | 5-18-76 |
| CHK | | 5-27-76 |
| APPD | | 11/4/76 |
| APPD | W I Berg | 7/27/76 |

DESIGN ACTIVITY APPROVAL
CUSTOMER APPROVAL

varian — MICROWAVE EQUIPMENT OPERATIONS SANTA CLARA CALIFORNIA

# ASSEMBLY OSC/BIAS PWB

| SIZE | CODE IDENT NO | DWG NO | REV |
|---|---|---|---|
| C | 99313 | 112843 | K |

SCALE 2X SHEET 1 OF 1

SUPERSEDES

112843 D

| varian | MICROWAVE EQUIPMENT OPERATIONS | TITLE: OSC/BIAS PWB | LM 112843 | REV K |
|---|---|---|---|---|
| CODE IDENT NO. 99313 | APPROVAL W.I. BERG DATE 7/6/76 | J. STECK 11/16/76 | | |

| APPLICATION | | | REVISION | | | | |
|---|---|---|---|---|---|---|---|
| NEXT ASSEMBLY | USED ON | EO | REV | DESCRIPTION | EO | DATE | APPROVED |
| E112822 | VZC-6961D6 | | H | INC. E.O. | PS-12606 | 9/18/78 | MHS |
| | | | J | INC. E.O. | PS-12673 | 9/18/78 | MHS |
| | | | K | INC. E.O. | PS-12695 | 9/18/78 | MHS |

REVISION STATUS

| | | | | | | | | | | | | | | | | | | | | | | | | | | | |
|---|---|---|---|---|---|---|---|---|---|---|---|---|---|---|---|---|---|---|---|---|---|---|---|---|---|---|---|
| SHEET | | | | | | | | | | | | | | | | | | | | | | | | | | | |
| LTR | | | | | | | | | | | | | | | | | | | | | | | | | | | |
| SHEET | | | | | | | | | | | | | | | | | | | | | | | | | | | |
| LTR | | | | | | | | | | | | | | | | | | | | | | | | | | | |
| SHEET | | | | | | | | | | | | | | | | | | | | | | | | | | | |
| LTR | | | | | | | | | | | | | | | | | | | | | | | | | | | |

| varian | MICROWAVE EQUIPMENT OPERATIONS | OSC/BIAS PWB | LM 112843 | REV A |
|---|---|---|---|---|

| ITEM NO | REF DES | DESCRIPTION | VARIAN PART NO. | MFG | MFG OR MS PART NO | QTY DASH NO -00 | -01 | -02 | -03 |
|---|---|---|---|---|---|---|---|---|---|
| 1 | | SCHEMATIC | D112840 | | | ref | | | |
| 2 | | P.W. BOARD, FAB | C112842 | | | 1 | | | |
| 3 | | HEATSINK | B113052 | | | 1 | | | |
| 4 | | SLEEVING | 88-494807 | BENTLEY HARRIS | BEN HAR 1151-B-#24 | AR | | | |
| 5 | C1,2 | CAPACITOR, CERAMIC, 27 pf 200V | 41-229939 | AVX | CK05BX270K | 2 | | | |
| 6 | C6,7 | CAPACITOR, CERAMIC, .1 µf 100V | 41-229952 | | CK06BX104K | 2 | | | |
| 7 | C4,5 | CAPACITOR, ELECT., 8.2 µf 100V | 41-506127 | SPRAGUE | 600D825F100KD4 | 2 | | | |
| 8 | C9 | CAPACITOR, CERAMIC, 1 µf 50V | 41-229936 | | CK06BX105K | 1 | | | |
| 9 | C8 | CAPACITOR, CERAMIC, 0.01 µf 200V | 41-229951 | | CK06BX103K | 1 | | | |
| 10 | C10,11 | CAPACITOR, ELECT., 33 µf 30V | 41-506128 | SPRAGUE | 600D336G030KD4 | 2 | | | |
| 11 | C12 | CAPACITOR, TANT., 1 µf, 50V 10% | 41-606802 | SPRAGUE | CS13BG105K | 1 | | | |
| 12 | CR1-3, CR5-7 | DIODE, SIGNAL | 66-320914 | | 1N914B | 6 | | | |
| 13 | CR4 | DIODE, CONSTANT CURRENT | 66-305302 | MOTOROLA | 1N5302 | 1 | | | |
| 14 | CR8 | DIODE, ZENER, 11V | 66-393302 | SEMTECH | SX10 | 1 | | | |
| 15 | CR9-12 | DIODE, RECTIFIER | 66-304936 | | 1N4936 | 4 | | | |
| 16 | L1 | COIL | 91-12933 | | | 1 | | | |

varian | MICROWAVE EQUIPMENT OPERATIONS | OSC/BIAS PWB | LM 112843 | REV K

| ITEM NO. | REF DES | DESCRIPTION | VARIAN PART NO. | MFG | MFG OR MS PART NO. | QTY/DASH NO. -00 | -01 | -02 | -03 |
|---|---|---|---|---|---|---|---|---|---|
| 17 | Q1 | TRANSISTOR, NPN | 62-989686 | TEXAS INST. | T1P35C | 1 | | | |
| 18 | Q2 | TRANSISTOR, PNP | 62-920016 | MOTOROLA | MPS U56 | 1 | | | |
| 19 | Q3 | TRANSISTOR, PNP | 62-920019 | MOTOROLA | MPS A56 | 1 | | | |
| 20 | Q4,5 | TRANSISTOR, NPN | 62-903879 | | 2N3879 | 2 | | | |
| | | | | | | | | | |
| | | | | | | | | | |
| 21 | R1,2 | RESISTOR, COMP., 6.2K 1/4W 5% | 32-301462 | | RC07GF622J | 2 | | | |
| 22 | R3,4 | RESISTOR, COMP., 270K 1/4W 5% | 32-301627 | | RC07GF274J | 2 | | | |
| 23 | R5 | RESISTOR, W.W., .33Ω 2W 10% | 35-199128 | | | 1 | | | |
| 24 | R6 | RESISTOR, COMP., 25.5K 1/4W 1% | 31-225255 | | RN60C | 1 | | | |
| 25 | R7,8 | RESISTOR, COMP., 200Ω 1/4W 5% | 32-301320 | | RC07GF201J | 2 | | | |
| 26 | R9,10 | RESISTOR, COMP., 51Ω 1/4W 5% | 32-301251 | | RC07GF510J | 2 | | | |
| 27 | R11 | RESISTOR, M.F., 7.5K 1/4W 1% | 31-604750 | DALE -or- CORNING | MFF 1/8-T2 NC5 | 1 | | | |
| 28 | R12 | RESISTOR, COMP., 27K 1/4W 5% | 32-301527 | | RC07GF273J | 1 | | | |
| 29 | | | | | | | | | |
| 30 | R15 | RESISTOR, VAR., 5K 3/4W 10% | 36-792218 | BOURNS | 3006P-1-502 | 1 | | | |
| 31 | R16 | RESISTOR, W.W., 1.5K 2.25W 5% | 31-549133 | OHMITE (or equiv) | 3961 | 1 | | | |
| 32 | R17 | RESISTOR, M.F., 7.15K 1/4W 1% | 31-604715 | DALE -or- CORNING | MFF 1/8-T2 NC5 | 1 | | | |
| 33 | R18 | RESISTOR, M.F., 5.11K 1/4W 1% | 31-604511 | DALE -or- CORNING | MFF 1/8-T2 NC5 | 1 | | | |
| 34 | R14 | RESISTOR, M.F., 30.1K 1/4W 1% | 31-605301 | DALE -or- CORNING | MFF 1/8-T2 NC5 | 1 | | | |
| 34A | T1 | TRANSFORMER | C112923 | | | 1 | | | |

| varian | MICROWAVE EQUIPMENT OPERATIONS | OSC/BIAS PWB | LM 112843 | REV K |
|---|---|---|---|---|

| ITEM NO. | REF DES | DESCRIPTION | VARIAN PART NO. | MFG | MFG OR MS PART NO. | QTY/DASH NO. | | | |
|---|---|---|---|---|---|---|---|---|---|
| | | | | | | -00 | -01 | -02 | -03 |
| 35 | U1 | I.C. OP AMP. | 62-600503 | FAIRCHILD | µA 723 | 1 | | | |
| 36 | U2 | I.C. VOLTAGE REGULATOR | 62-600675 | MOTOROLA | µA 78GU1C | 1 | | | |
| 37 | | TOROID RETAINER | 43-900001 | | | 1 | | | |
| 38 | | WASHER, SHOULDER #4 | 14-998017 | | | 1 | | | |
| 39 | | WASHER, CORK | 14-999800 | | | 1 | | | |
| 40 | | SCREW, 4-40 x 3/8" | 12-222004-06 | | | 4 | | | |
| 41 | | EXTERNAL TOOTH LOCKWASHER #4 | 14-317104 | | | 8 | | | |
| 42 | | HEX NUT 4-40 | 13-102004 | | | 4 | | | |
| 43 | | PLAIN WASHER, NYLON, #4 | 14-999702 | | | 1 | | | |

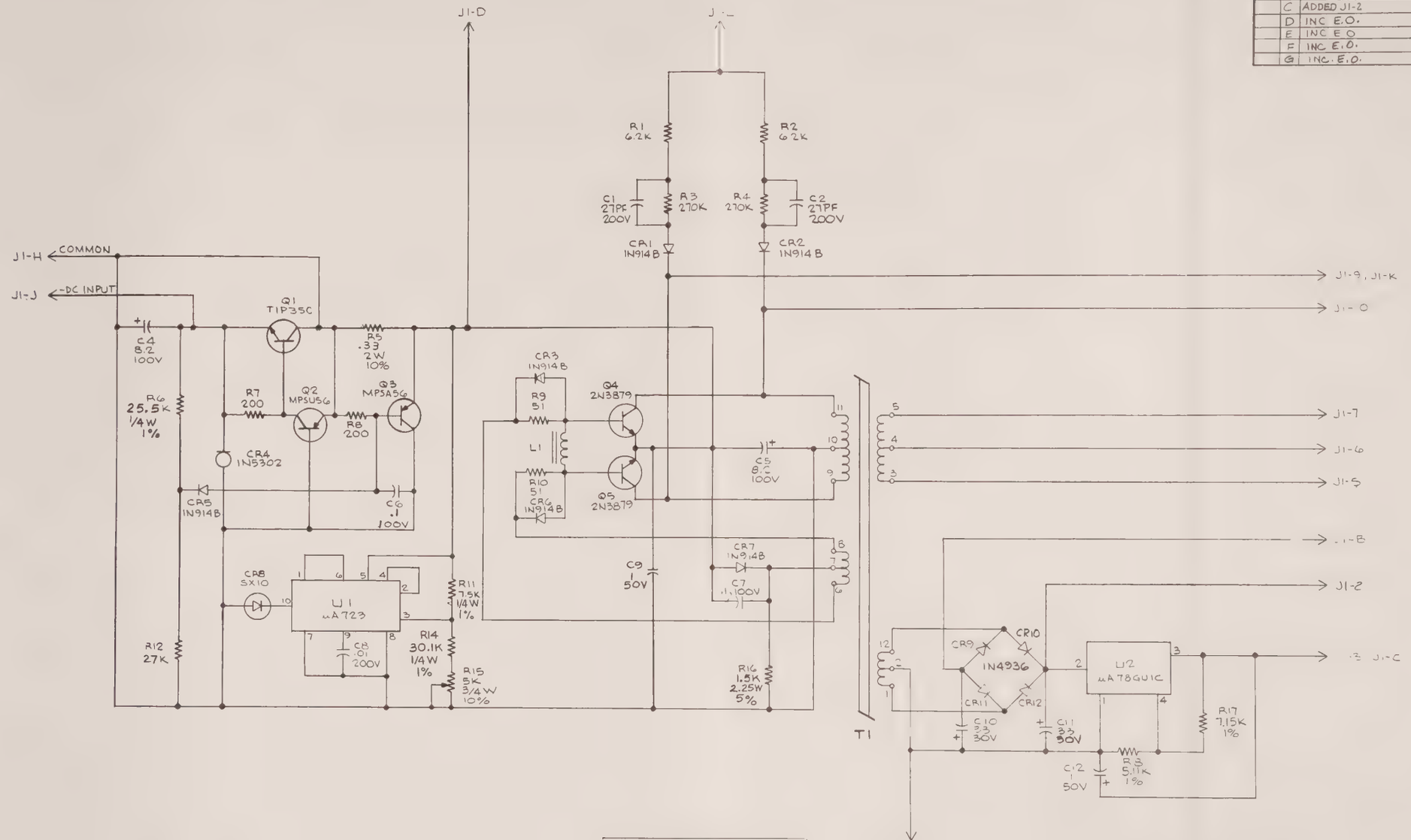


| REVISIONS | | | | | |
|---|---|---|---|---|---|
| ZONE | LTR | DESCRIPTION | EO | DATE | APPROVED |
| | A | Q1 WAS 2N5979, ADDED SIGNAL LEADS TO J1-H & J1-J. | | 6/23/76 | [illegible] |
| | B | R17 WAS 5.11K, R18 WAS 7.15K | | 10/13/76 | [illegible] |
| | C | ADDED J1-2 | — | 11-8-76 | [illegible] |
| | D | INC E.O. | PS11900 | 7-11-77 | [illegible] |
| | E | INC E O | PS12423 | 3-31-78 | [illegible] |
| | F | INC E.O. | PS12606 | 9-20-78 | [illegible] |
| | G | INC. E.O. | PS12673 | 9-20-78 | [illegible] |

| REFERENCE DESIGNATIONS | |
|---|---|
| LAST USED | UNUSED |
| C12, CR12, Q5, R18, U2 | |

NOTES:
1. UNLESS OTHERWISE SPECIFIED: ALL RESISTORS ARE IN OHMS, 1/4W, COMP, 5%, & ALL CAPACITORS ARE IN MICROFARADS

| QTY | IDENTIFYING NUMBER | DESCRIPTION | CODE IDENT | ITEM |
|---|---|---|---|---|

LIST OF MATERIALS

| | |
|---|---|
| C112843 | VEC-6961D6 |
| NEXT ASSEMBLY | USED ON |
| APPLICATION | |

UNLESS OTHERWISE SPECIFIED DIMENSIONS ARE IN INCHES
DECIMALS: 1PL ± .1 2PL ± .02
3PL ± .005 FRAC ± 1/64
ANG ± 1° SURFACE FINISH √
MATERIAL
SPEC NO
FINISH

CONTRACT NUMBER
DR F GAMBLE 5-26-76
CHK [signature] 5-27-76
APPD [signature] 11/15/76
APPD W I Berg 3/17/75
DESIGN ACTIVITY APPROVAL
CUSTOMER APPROVAL

varian
MICROWAVE EQUIPMENT OPERATIONS
SANTA CLARA, CALIFORNIA

# SCHEMATIC OSC. / BIAS PWB

| SIZE | CODE IDENT NO | |
|---|---|---|
| D | 77313 | 112840 G |

SCALE ~ SHEET 1 OF 1

SUPERSEDES

112840 D

3440-09-04. 11/72

| REVISIONS | | | | | |
|---|---|---|---|---|---|
| ZONE | LTR | DESCRIPTION | EO | DATE | APPROVED |
| | A | REVISED | PS11370 | 7/22/76 | |
| | B | REVISED/ADDED SHT 2 | PS11432 PS11511 | 10-7-76 | TE / JHT |
| | C | INC E.O. | PS11915A | 6-22-77 | |
| | D | INC. E.O. | PS12076 | 7-27-77 | |

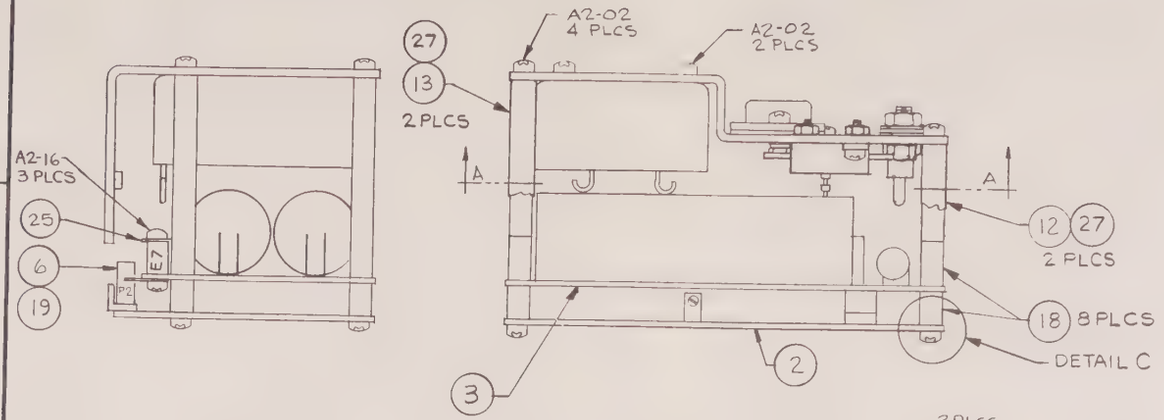


SECTION A-A

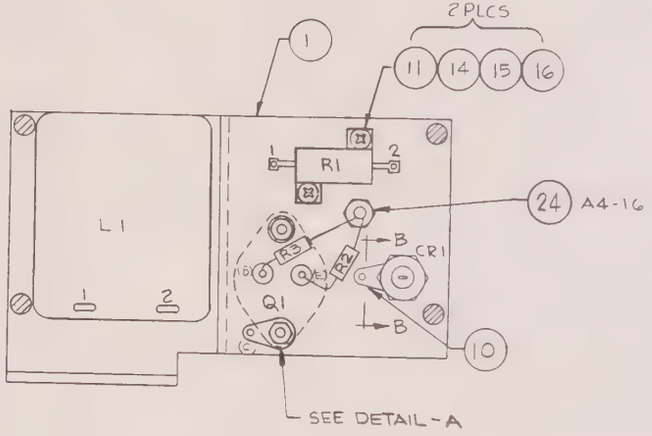


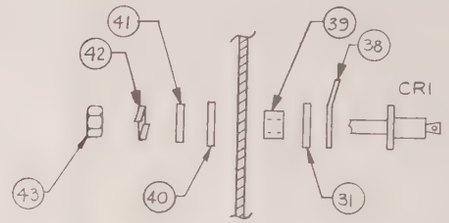


SECTION B-B

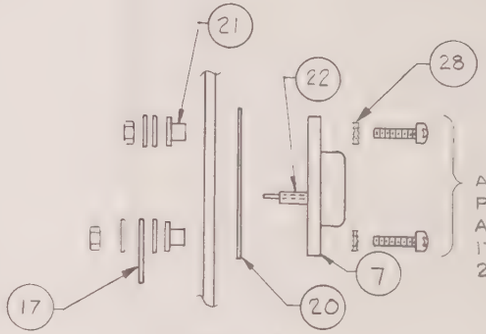


DETAIL-A

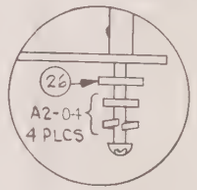


DETAIL-C

SEE SEPARATE LIST OF MATERIALS LM 113015

| QTY | IDENTIFYING NUMBER | DESCRIPTION | CODE IDENT | ITEM |
|---|---|---|---|---|
| LIST OF MATERIALS | | | | |

3 WIRE ASSEMBLY PER SHT 2 THIS DWG.
2. ASSEMBLE USING HARDWARE/DWG 110625
1. ASSEMBLE/VARIAN WORKMANSHIP STD 87-800-192.
NOTES:

| | | | | | |
|---|---|---|---|---|---|
| | | UNLESS OTHERWISE SPECIFIED DIMENSIONS ARE IN INCHES | CONTRACT NUMBER | | |
| | | DECIMALS: 1PL ± .1 2PL ± .02 | DR | F. GAMBLE | 6-9-76 |
| | | 3PL ± .005 FRAC ± 1 64 | CHK | | 6-14-76 |
| | | ANG ± 1 SURFACE FINISH ✓ | APPD | | 11/4/76 |
| | | MATERIAL | APPD | W. Beck | 8/17/76 |
| 112822 | VEC-6961D6 | | DESIGN ACTIVITY APPROVAL | | |
| NEXT ASSEMBLY | USED ON | SPEC NO | CUSTOMER APPROVAL | | |
| APPLICATION | | FINISH | | | |

varian — MICROWAVE EQUIPMENT OPERATIONS, SANTA CLARA, CALIFORNIA

ASSEMBLY, SWITCH REGULATOR

| SIZE | CODE IDENT NO. | | |
|---|---|---|---|
| C | 99313 | 113015 | D |

SCALE 1:1 — SHEET 1 OF 2

SUPERSEDES

113015

2440-08-03 11/72 PRINTED IN U.S.A.

| REVISIONS | | | | | |
|---|---|---|---|---|---|
| ZONE | LTR | DESCRIPTION | EO | DATE | APPROVED |
| | B | SEE SHT 1 | ——— | 10/29/76 | JHT |

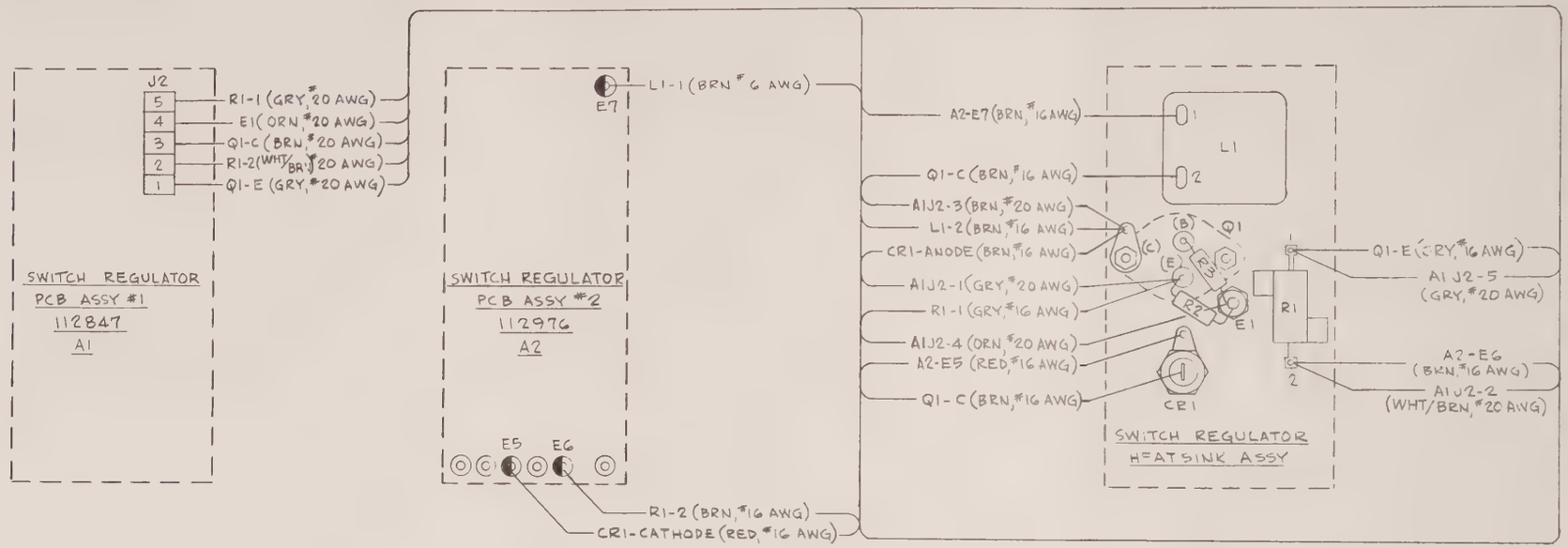


NOTES:

1. ◐ INDICATES INSTALLATION OF ITEM 25 (SEE LM 113015).

| QTY | IDENTIFYING NUMBER | DESCRIPTION | CODE IDENT | ITEM |
|---|---|---|---|---|

LIST OF MATERIALS

| | | | |
|---|---|---|---|
| | | UNLESS OTHERWISE SPECIFIED DIMENSIONS ARE IN INCHES | |
| | | DECIMALS: 1PL ± .1 2PL ± .02 | |
| | | 3PL ± .005 FRAC ± 1/64 | |
| | | ANG ± 1 SURFACE FINISH ✓ | |
| | | MATERIAL | |
| 112822 | VZH-6961D6 | | |
| NEXT ASSEMBLY | USED ON | SPEC NO | |
| APPLICATION | | FINISH | |

| CONTRACT NUMBER | | |
|---|---|---|
| DR | JHT | 10/29/76 |
| CHK | | 11-15-76 |
| APPD | | 11/15/76 |
| APPD | | |
| DESIGN ACTIVITY APPROVAL | | |
| CUSTOMER APPROVAL | | |

varian

MICROWAVE EQUIPMENT OPERATIONS
SANTA CLARA, CALIFORNIA

# WIRING DIAGRAM - SWITCH REGULATOR ASSEMBLY

| SIZE | CODE IDENT NO | | |
|---|---|---|---|
| C | 99313 | 113015 | D |
| SCALE | | SHEET 2 OF 2 | |

SUPERSEDES

113015

3440-09-03 11/72 PRINTED IN U.S.A.

| varian | MICROWAVE EQUIPMENT OPERATIONS | TITLE: ASSY, SWITCH REGULATOR | LM 113015 | REV D |
|---|---|---|---|---|
| CODE IDENT NO 99313 | APPROVAL [illegible] DATE 11/16/76 | | | |

| APPLICATION | | | REVISION | | | | |
|---|---|---|---|---|---|---|---|
| NEXT ASSEMBLY | USED ON | EO | REV | DESCRIPTION | EO | DATE | APPROVED |
| | VEC-696106 | | A | REVISED PER E.O. | PS11370 | 7/23/76 | |
| | | | B | INC. E.C. PS11511 | PS11432 | 10/5/76 | |
| | | | C | INC E.O | PS11915A | 6/22/77 | |
| | | | D | INC. E.O. | PS12076 | 7-27-77 | TE |

REVISION STATUS

| | | | | | | | | | | | | | | | | | | | | | | | | | | | | |
|---|---|---|---|---|---|---|---|---|---|---|---|---|---|---|---|---|---|---|---|---|---|---|---|---|---|---|---|---|
| SHEET | | | | | | | | | | | | | | | | | | | | | | | | | | | | |
| LTR | | | | | | | | | | | | | | | | | | | | | | | | | | | | |
| SHEET | | | | | | | | | | | | | | | | | | | | | | | | | | | | |
| LTR | | | | | | | | | | | | | | | | | | | | | | | | | | | | |
| SHEET | | | | | | | | | | | | | | | | | | | | | | | | | | | | |
| LTR | | | | | | | | | | | | | | | | | | | | | | | | | | | | |

| varian | MICROWAVE EQUIPMENT OPERATIONS | ASSY, SWITCH REGULATOR | LM 113015 | REV D |
|---|---|---|---|---|

| ITEM NO | REF DES | DESCRIPTION | VARIAN PART NO. | MFG | MFG OR MS PART NO. | QTY/DASH NO. | | | |
|---|---|---|---|---|---|---|---|---|---|
| | | | | | | -00 | -01 | -02 | -03 |
| 1 | | HEATSINK, SWITCH REGULATOR | C113057 | | | 1 | | | |
| 2 | A1 | SWITCH REG. PCB #1 | C112847 | | | 1 | | | |
| 3 | A2 | SWITCH REG. PCB #2 | C112976 | | | 1 | | | |
| 4 | CR1 | DIODE, ZENER 110V | 66-398907 | SEMTECH | 2SF1 | 1 | | | |
| 5 | L1 | CHOKE, SWITCH REGULATOR | C112924 | | | 1 | | | |
| 6 | P2 | CONNECTOR (5 CONTACT) | 51-407006 | MOLEX | 09-50-7051 | 1 | | | |
| 7 | Q1 | TRANSISTOR, 2N5671 | 62-905671 | RCA ONLY - NO SUBSTITUTE | 2N5671 | 1 | | | |
| 8 | R1 | RESISTOR, .01, 10W, 5% W.W. | 35-375222 | DALE | RH-10 TYPE | 1 | | | |
| 9 | R2 | RESISTOR, C.C., 6.8, 1/4W, 5% | 32-301168 | | RC07GF6R8J | 1 | | | |
| 10 | | | | | | | | | |
| 11 | | SCREW, 2-56 x 5/16 | 12-221102-05 | | | 2 | | | |
| 12 | | STANDOFF 4-40 x 1-1/8 | 22-429772 | AMATOM | 8113 -B0440-3A | 2 | | | |
| 13 | | STANDOFF 4-40 x 1-3/4 | 22-429773 | AMATOM | 8122 -B0440-3A | 2 | | | |
| 14 | | NUT #2-56 | 13-121002 | | | 2 | | | |
| 15 | | WASHER - #2 | 14-112002 | | | 2 | | | |
| 16 | | LOCKWASHER - #2 | 14-201102 | | | 2 | | | |
| 17 | | LUG, #4 | 16-139910 | ZIERICK | 805-#6 | 1 | | | |
| 18 | | STANDOFF 4-40 | 22-407710 | AMATOM | 9785-SS-0440-0 | 8 | | | |
| 19 | | CONTACTS | 51-407110 | MOLEX | 08-50-0106 | 5 | | | |
| 20 | | INSULATOR, TRANSISTOR | 62-898002 | UNION CARBIDE | H-4001 | 1 | | | |
| 21 | | SHOULDER WASHER, NYLON | 14-998001 | FEDERAL SCREW | 105101 | 2 | | | |

| varian | MICROWAVE EQUIPMENT OPERATIONS | ASSY, SWITCH REGULATOR | LM 113015 | REV D |
|---|---|---|---|---|

| ITEM NO | REF DES | DESCRIPTION | VARIAN PART NO. | MFG | MFG OR MS PART NO. | QTY/DASH NO. -00 | -01 | -02 | -03 |
|---|---|---|---|---|---|---|---|---|---|
| 22 | | SLEEVING, FIBREGLASS | 88-495071 | BENTLEY HARRIS | BEN HAR 1062-H8 | AR | | | |
| 23 | R3 | RESISTOR, C.C., 2.7 1/2W 5% | 32-201127 | | | 1 | | | |
| 24 | E1 | TERMINAL, INSULATED | 16-319930 | USECO | 1451-7-1 | 1 | | | |
| 25 | | LUG | 15-607211 | AMP | 36149 | 3 | | | |
| 26 | | WASHER, #4 NYLON | 14-999702 | | | 4 | | | |
| 27 | | TUBING, HEAT SHRINKABLE | 88-488182 | RAYCHEM | RT876 | AR | | | |
| 28 | | LOCKWASHER, EXT. TOOTH | 14-317106 | | | 2 | | | |
| 29 | | FLAT WASHER #10 | 14-122010 | | | 1 | | | |
| 30 | | SCHEMATIC | D113244 | | | REF | | | |
| 31 | | INSULATOR | 62-898000 | UNION CARBIDE | H-4027 | 1 | | | |
| 32 | | WIRE, TEF. INSUL., "EE", #16 AWG BRN | 81-249981 | | | AR | | | |
| 33 | | WIRE, TEF. INSUL., "EE", #16 AWG GRY | 81-249988 | | | AR | | | |
| 34 | | WIRE, TEF. INSUL., "EE", #16 AWG RED | 81-249982 | | | AR | | | |
| 35 | | WIRE, TEF. INSUL., "EE", #20 AWG BRN | 81-288826 | | | AR | | | |
| 36 | | WIRE, TEF. INSUL., "EE", #20 AWG ORN | 81-288828 | | | AR | | | |
| 37 | | WIRE, TEF. INSUL., "EE", #20 AWG GRY | 81-288833 | | | AR | | | |
| 38 | | SOLDER LUG #10 | 15-003493 | | | 1 | | | |
| 39 | | INSULATOR, TEFLON | 62-899917 | MOTOROLA | B51547F012 | 1 | | | |
| 40 | | WASHER, MICA | 62-899002 | MOTOROLA | B52600=F001 | 1 | | | |
| 41 | | WASHER, FLAT, #10 | 14-122010 | | | 1 | | | |
| 42 | | WASHER, LOCK #10 | 14-302010 | | | 1 | | | |

varian | MICROWAVE EQUIPMENT OPERATIONS | ASSY, SWITCH REGULATOR | SHEET 4 OF 4 | LM 113015 | REV D

| ITEM NO | REF DES | DESCRIPTION | VARIAN PART NO. | MFG | MFG OR MS PART NO. | QTY/DASH NO. -00 | -01 | -02 | -03 |
|---|---|---|---|---|---|---|---|---|---|
| 43 | | NUT, #10-32 | 13-122060 | | | 1 | | | |
| 44 | | WIRE, EE, TEF. INSUL., #20 AWG WHT/BRN | 81-288841 | | | AR | | | |

FORM 1758-02-375

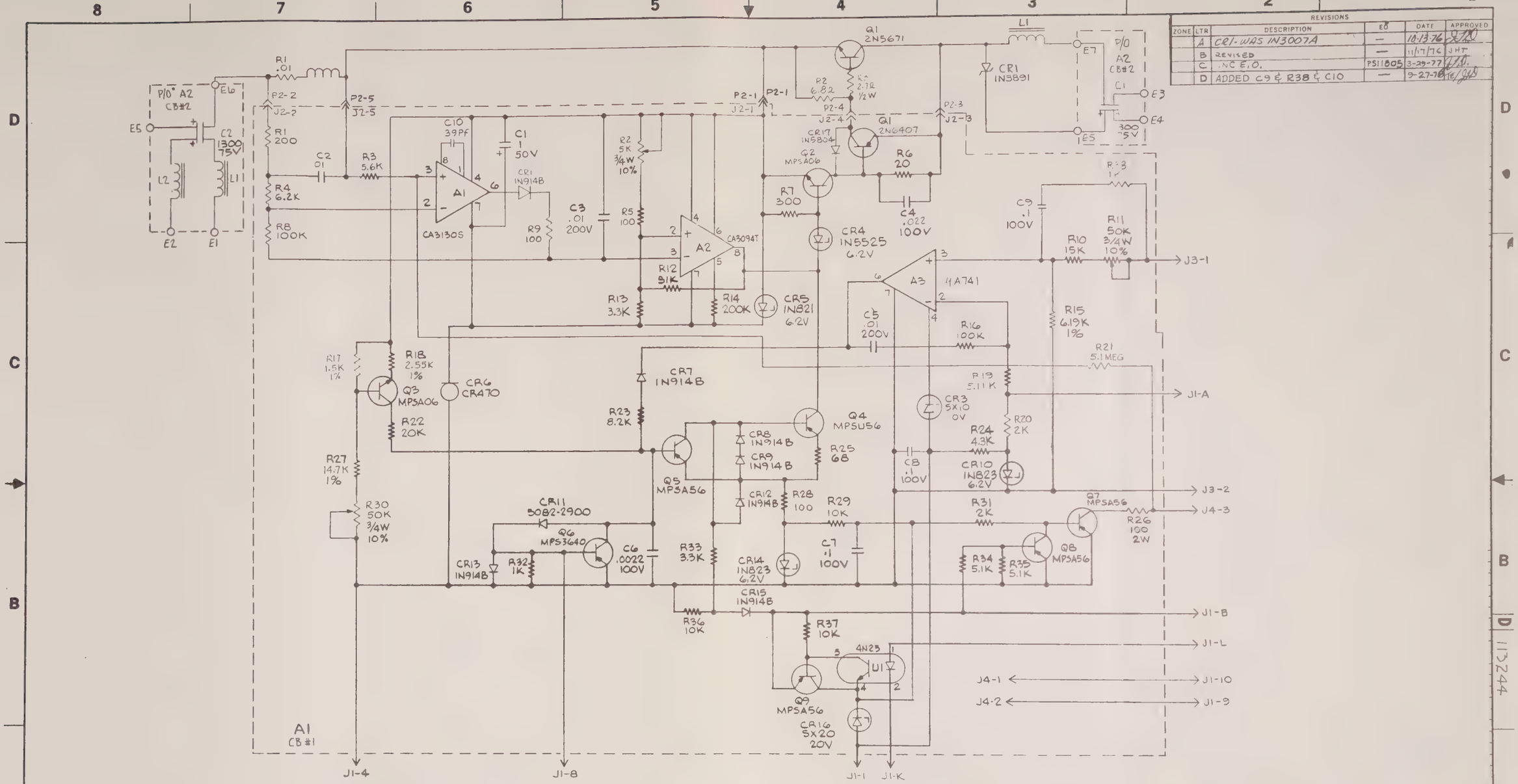


| REVISIONS | | | | | |
|---|---|---|---|---|---|
| ZONE | LTR | DESCRIPTION | EO | DATE | APPROVED |
| | A | CR1-WAS 1N3007A | — | 10-13-76 | [illegible] |
| | B | REVISED | — | 11/17/76 | JHT |
| | C | INC E.O. | PS11805 | 3-29-77 | [illegible] |
| | D | ADDED C9 & R38 & C10 | — | 9-27-78 | TE/[illegible] |

1. UNLESS OTHERWISE SPECIFIED: ALL RESISTORS ARE IN OHMS 1/4 W, COMP., 5% & ALL CAPACITORS ARE IN MICROFARADS

NOTES:

| QTY | IDENTIFYING NUMBER | DESCRIPTION | CODE IDENT | ITEM |
|---|---|---|---|---|

LIST OF MATERIALS

| | | | |
|---|---|---|---|
| C113015 | VZC-6961D6 | | |
| NEXT ASSEMBLY | USED ON | | |
| APPLICATION | | | |

UNLESS OTHERWISE SPECIFIED DIMENSIONS ARE IN INCHES

DECIMALS: 1PL ± .1 2PL ± .02

3PL ± .005 FRAC ± 1/64

ANG ± 1° SURFACE FINISH ✓

MATERIAL

SPEC NO.

FINISH

CONTRACT NUMBER

| | | |
|---|---|---|
| DR | F GAMBLE | 5-27-76 |
| CHK | [illegible] | 6-1-76 |
| APPD | [illegible] | 11/17/76 |
| APPD | [illegible] | 6/17/76 |

DESIGN ACTIVITY APPROVAL

CUSTOMER APPROVAL

varlan

MICROWAVE EQUIPMENT OPERATIONS SANTA CLARA CALIFORNIA

SCHEMATIC SWITCH REGULATOR ASSY

| SIZE | CODE IDENT NO | | |
|---|---|---|---|
| D | 99313 | 113244 | D |

SCALE ~ SHEET 1 OF 1

SUPERSEDES

3440 09-04. 11/72

113244

| ZONE | LTR | DESCRIPTION | EO | DATE | APPROVED |
|---|---|---|---|---|---|
| | A | REVISED PER ARTWORK CHG'S | — | 7-20-76 | JHT |
| | B | REVISED PER E.O. | PS11394 | 8-9-76 | JHT |
| | C | REVISED | — | 10/27/76 | JHT |
| | D | INC E.O. | PS11663 | 2-25-77 | JHT |
| | E | INC E.O. | PS11805 | 3-29-77 | JHT |
| | F | REVISED PER E.O. | PS11896 | 5/13/77 | JHT |
| | G | INC E.O | PS12077 | 8/1/77 | JHT |
| | H | INC E.O. | PS12240 | 12-21-77 | JHT |
| | J | INC E.O. | PS12631 | 9-20-78 | TE |
| | K | INC E.O. | PS12656 | 9-20-78 | TE |

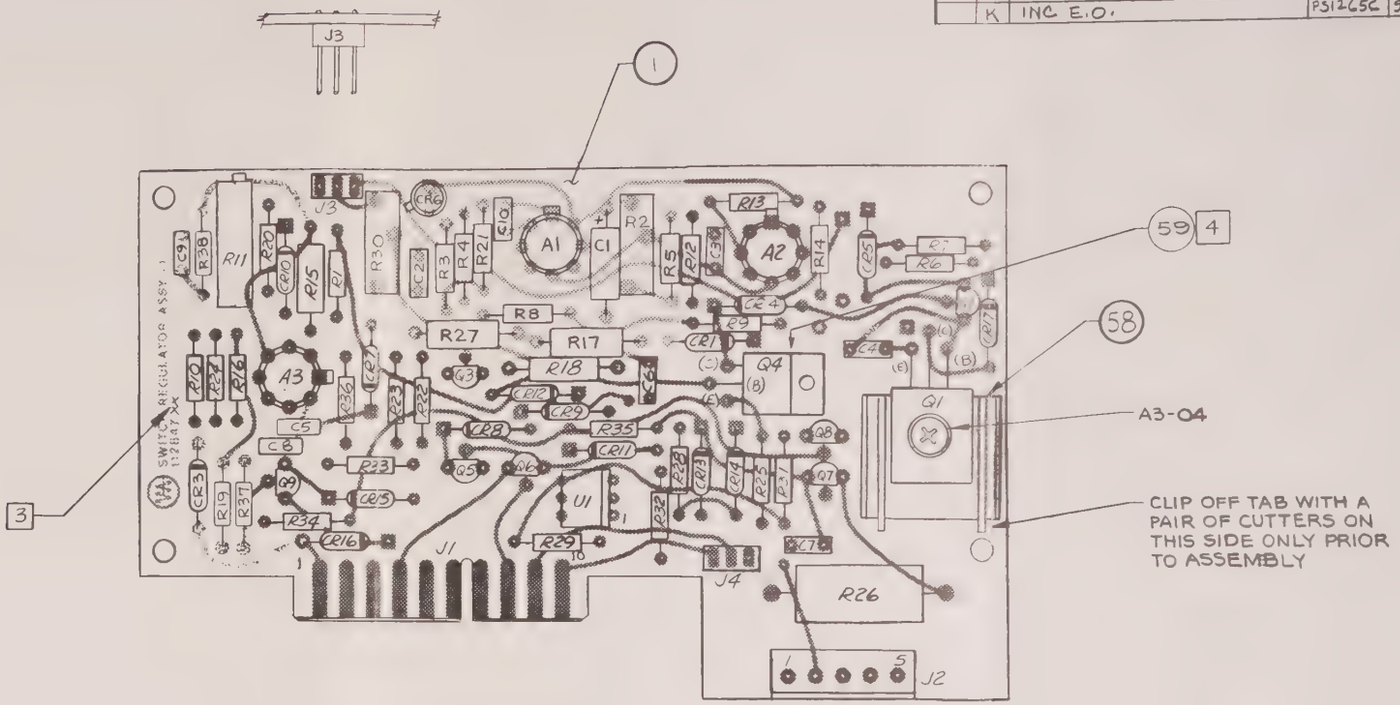


SEE SEPARATE LIST OF MATERIALS-LM112847

| QTY | IDENTIFYING NUMBER | DESCRIPTION | CODE IDENT | ITEM |
|---|---|---|---|---|

LIST OF MATERIALS

4 APPLY ADHESIVE (ITEM 59) TO BOTTOM SIDE OF Q4 AND A FILLET OF MATERIAL UNDER MOUNTING TAB AGAINST TRANSISTOR BODY. THIS OPERATION TO BE PERFORMED AFTER WAVE SOLDER.

3 MARK CURRENT REVISION LETTER OF ASSY.

2. ASSEMBLE USING HARDWARE/DWG 110625.

1. ASSEMBLE/VARIAN WORKMANSHIP STD. 87-800-192.

NOTES:

| NEXT ASSEMBLY | USED ON |
|---|---|
| E112822 | VZC-6961D6 |

APPLICATION

UNLESS OTHERWISE SPECIFIED DIMENSIONS ARE IN INCHES

DECIMALS 1PL = .1 2PL = .02

3PL = .005 FRAC = 1/64

ANG = 1 SURFACE FINISH ✓

MATERIAL

SPEC NO

FINISH

CONTRACT NUMBER

| | | |
|---|---|---|
| DR | F.GAMBLE | 5-19-76 |
| CHK | [signature] | 6-2-76 |
| APPD | [signature] | 11/15/76 |
| APPD | W.I. Berg | 7/29/76 |

DESIGN ACTIVITY APPROVAL

CUSTOMER APPROVAL

varian — MICROWAVE EQUIPMENT OPERATIONS SANTA CLARA CALIFORNIA

ASSEMBLY SWITCH REGULATOR PWB #1

| SIZE | CODE IDENT NO | | |
|---|---|---|---|
| C | 99313 | 112847 | K |

SCALE 2X SHEET 1 OF 1

SUPERSEDES

3440-09-03 11/72 PRINTED IN U.S.A.

| varian | MICROWAVE EQUIPMENT OPERATIONS | TITLE: SWITCH REGULATOR PWB #1 ASSY | LM 112847 | REV K |
|---|---|---|---|---|
| CODE IDENT NO 99313 | APPROVAL | DATE 11/5/76 | | |

| APPLICATION | | |
|---|---|---|
| NEXT ASSEMBLY | USED ON | EO |
| | | |
| | | |
| | | |
| | | |
| | | |
| | | |

REVISION

| REV | DESCRIPTION | EO | DATE | APPROVED |
|---|---|---|---|---|
| A | INC. E.O. | PS-11339 | 7/13/76 | JHT |
| B | INC. E.O. | PS-11394 | 8/2/76 | |
| C | REVISED | | 10/6/76 | MHS |
| D | REVISED PER E.O. | PS11663 | 2-28-77 | |
| E | INC. E.O. | PS11805 | 3-29-77 | |
| F | INC. E.O. | PS-11896 | 5/13/77 | MHS |
| G | INC E.O. | PS12077 | 8/1/77 | |
| H | INC E.O. | PS12240 | 12-21-77 | |
| J | INC E.O. | PS12631 | 9-20-78 | |
| K | INC E.O. | PS12656 | 9-20-78 | |

REVISION STATUS

| | | | | | | | | | | | | | | | | | | | | | | | | | | | |
|---|---|---|---|---|---|---|---|---|---|---|---|---|---|---|---|---|---|---|---|---|---|---|---|---|---|---|---|
| SHEET | | | | | | | | | | | | | | | | | | | | | | | | | | | |
| LTR | | | | | | | | | | | | | | | | | | | | | | | | | | | |
| SHEET | | | | | | | | | | | | | | | | | | | | | | | | | | | |
| LTR | | | | | | | | | | | | | | | | | | | | | | | | | | | |
| SHEET | | | | | | | | | | | | | | | | | | | | | | | | | | | |
| LTR | | | | | | | | | | | | | | | | | | | | | | | | | | | |

varian | MICROWAVE EQUIPMENT OPERATIONS | SWITCH REGULATOR PWB #1 ASSY | LM 112847 | REV K

| ITEM NO | REF DES | DESCRIPTION | VARIAN PART NO. | MFG | MFG OR MS PART NO. | QTY/DASH NO. -00 | -01 | -02 | -03 |
|---|---|---|---|---|---|---|---|---|---|
| | | SCHEMATIC | D112844 | | | ref | | | |
| 1 | | FABRICATION PWB | C112846 | | | 1 | | | |
| 2 | A1 | I.C. AMPLIFIER POWER SWITCH | 62-600537 | RCA | CA3130S | 1 | | | |
| 3 | A2 | I.C. AMPLIFIER POWER SWITCH | 62-600676 | RCA | CA3094T | 1 | | | |
| 4 | A3 | I.C. AMPLIFIER POWER SWITCH | 62-600215 | FAIRCHILD | μA741 | 1 | | | |
| 5 | C1 | CAPACITOR, TANT., 1 μf, 50V | 41-606802 | SPRAGUE | CS13BG105K | 1 | | | |
| 6 | C2,3,5 | CAPACITOR, CERAMIC, .01 μf, 200V | 41-229951 | | CK06BX103K | 3 | | | |
| 7 | C4 | CAPACITOR, CERAMIC, .022 μf, 100V | 41-229961 | | CK06BX223K | 1 | | | |
| 8 | C6 | CAPACITOR, CERAMIC .0022μf $^{+}_{-}$5% 100V | 41-205921 | ERIE | 8131-100C0G0-222J | 1 | | | |
| 9 | C7,8,9 | CAPACITOR, CERAMIC, .1 μf, 100V | 41-229952 | | CK06BX104K | 3 | | | |
| 9A | C10 | CAPACITOR, CERAMIC, 39 pf, 1 KV | 41-279850 | | | 1 | | | |
| | | | | | | | | | |
| 10 | CR1, 7-9, 12, CR13, 15 | DIODE, SIGNAL | 66-320914 | | 1N914B | 7 | | | |
| 11 | | | | | | | | | |
| 12 | CR3 | DIODE, ZENER 10V | 66-393302 | SEMTECH | SX10 | 1 | | | |
| 13 | CR4 | DIODE, ZENER 6.2V | 66-305525 | | 1N5525 | 1 | | | |
| 14 | CR5 | DIODE, ZENER 6.2V | 66-300821 | | 1N821 | 1 | | | |
| 15 | CR6 | DIODE, CONSTANT CURRENT | 66-397823 | SILICONIX | CR470 | 1 | | | |
| 16 | CR10,14 | DIODE, ZENER 6.2V | 66-300823 | | 1N823 | 2 | | | |
| 17 | CR11 | DIODE | 66-981103 | HEWLETT-PACKARD | 5082-2900 | 1 | | | |
| 18 | CR16 | DIODE, ZENER 20V | 66-393305 | SEMTECH | SX20 | 1 | | | |

| varian | MICROWAVE EQUIPMENT OPERATIONS | SWITCH REGULATOR PWB #1 ASSY | LM 112847 | REV K |
|---|---|---|---|---|

| ITEM NO | REF DES | DESCRIPTION | VARIAN PART NO. | MFG | MFG OR MS PART NO. | QTY/DASH NO. | | | |
|---|---|---|---|---|---|---|---|---|---|
| | | | | | | -00 | -01 | -02 | -03 |
| 19 | J2 | CONNECTOR, WAFER 5 CONTACT | 51-407104 | MOLEX | 09-60-1051 | 1 | | | |
| 20 | J3,J4 | CONNECTOR, WAFER 3 CONTACT | 51-407116 | MOLEX | 22-03-2031 | 2 | | | |
| | | | | | | | | | |
| 21 | Q1 | TRANSISTOR, PNP | 62-906407 | | 2N6407 | 1 | | | |
| 22 | Q2,Q3 | TRANSISTOR, NPN | 62-920018 | MOTOROLA | MPS A06 | 2 | | | |
| 23 | Q4 | TRANSISTOR, PNP | 62-920016 | | MPS U56 | 1 | | | |
| 24 | Q5,7, Q8,9 | TRANSISTOR, PNP | 62-920019 | | MPS A56 | 4 | | | |
| 25 | Q6 | TRANSISTOR, PNP | 62-920011 | | MPS 3640 | 1 | | | |
| | | | | | | | | | |
| 25A | R1 | RESISTOR, COMP. 200 1/4W 5% | 32-301320 | | RC07GF201J | 1 | | | |
| 26 | R2 | RESISTOR, VARIABLE, 5K, 3/4W, 10% | 36-792218 | BOURNS | 3006P-1-502 | 1 | | | |
| 27 | R29, 36, R37 | RESISTOR, COMP., 10K, 1/4W, 5% | 32-301510 | | RC07GF103J | 3 | | | |
| 28 | | | | | | | | | |
| 29 | R6 | RESISTOR, COMP., 20 1/4W, 5% | 32-301220 | | RC07GF200J | 1 | | | |
| 30 | R7 | RESISTOR, COMP., 300 1/4W, 5% | 32-301330 | | RC07GF301J | 1 | | | |
| 31 | | | | | | | | | |
| 32 | R9 | RESISTOR, COMP., 100 1/4W, 5% | 32-301310 | | RC07GF101J | 1 | | | |
| 33 | R10 | RESISTOR, COMP., 15K, 1/4W, 5% | 32-301515 | | RC07GF153J | 1 | | | |
| 34 | R11,30 | RESISTOR, VARIABLE, 50K, 3/4W, 10% | 36-792210 | BOURNS | 3006P-1-503 | 2 | | | |
| 35 | R12 | RESISTOR, COMP. 51K, 1/4W, 5% | 32-301551 | | RC07GF513J | 1 | | | |
| 36 | | | | | | | | | |

| varian | MICROWAVE EQUIPMENT OPERATIONS | SWITCH REGULATOR PWB #1 ASSY | LM 112847 | REV K |
|---|---|---|---|---|

| ITEM NO | REF DES | DESCRIPTION | VARIAN PART NO. | MFG | MFG OR MS PART NO. | QTY/DASH NO. | | | |
|---|---|---|---|---|---|---|---|---|---|
| | | | | | | -00 | -01 | -02 | -03 |
| | | | | | | | | | |
| 37 | R14 | RESISTOR, COMP., 200K, 1/4W, 5% | 32-301620 | | RC07GF204J | 1 | | | |
| 38 | R15 | RESISTOR, M.F., 6.19K, 1/4W, 1% | 31-604619 | DALE | LMF-1/8-T2 | 1 | | | |
| 39 | R8,16 | RESISTOR, COMP., 100K, 1/4W, 5% | 32-301610 | | RC07GF104J | 2 | | | |
| 40 | R17 | RESISTOR, M.F., 1.5K, 1/4W, 1% | 31-604150 | DALE | LMF-1/8-T2 | 1 | | | |
| 41 | R18 | RESISTOR, M.F., 2.55K, 1/4W, 1% | 31-604255 | DALE | LMF-1/8-T2 | 1 | | | |
| 42 | R19,34, R35 | RESISTOR, COMP., 5.1K, 1/4W, 5% | 32-301451 | | RC07GF512J | 3 | | | |
| 43 | R20,31 | RESISTOR, COMP., 2K, 1/4W, 5% | 32-301420 | | RC07GF202J | 2 | | | |
| 44 | R21 | RESISTOR, COMP., 5.1M, 1/4W, 5% | 32-301751 | | RC07GF515J | 1 | | | |
| 45 | R22 | RESISTOR, COMP., 20K, 1/4W, 5% | 32-301520 | | RC07GF203J | 1 | | | |
| 46 | R23 | RESISTOR, COMP., 8.2K, 1/4W, 5% | 32-301482 | | RC07GF822J | 1 | | | |
| 47 | R24 | RESISTOR, COMP., 4.3K, 1/4W, 5% | 32-301443 | | RC07GF432J | 1 | | | |
| 48 | R25 | RESISTOR, COMP., 68 , 1/4W, 5% | 32-301268 | | RC07GF680J | 1 | | | |
| 49 | R26 | RESISTOR, COMP., 100 , 2W, 5% | 34-401310 | | RC42GF101J | 1 | | | |
| 50 | R27 | RESISTOR, M.F., 14.7K, 1/4W, 1% | 31-605147 | DALE | LMF-1/8-T2 | 1 | | | |
| 51 | R5,28 | RESISTOR, COMP., 100 , 1/4W, 5% | 32-301310 | | RA07GF101J | 2 | | | |
| 52 | | | | | | | | | |
| 53 | R32,38 | RESISTOR, COMP., 1K, 1/4W, 5% | 32-301410 | | RC07GF102J | 2 | | | |
| 54 | R13,33 | RESISTOR, COMP., 3.3K, 1/4W, 5% | 32-301433 | | RC07GF332J | 2 | | | |
| 55 | R3 | RESISTOR, COMP., 5.6K, 1/4W, 5% | 32-301456 | | RC07GF562J | 1 | | | |
| 56 | R4 | RESISTOR, COMP., 6.2K, 1/4W, 5% | 32-301462 | | RC07GF622J | 1 | | | |

| varian | MICROWAVE EQUIPMENT OPERATIONS | SWITCH REGULATOR PWB #1 ASSY | LM 112847 | REV K |
|---|---|---|---|---|

| ITEM NO | REF DES | DESCRIPTION | VARIAN PART NO. | MFG | MFG OR MS PART NO. | QTY/DASH NO. | | | |
|---|---|---|---|---|---|---|---|---|---|
| | | | | | | -00 | -01 | -02 | -03 |
| 57 | U1 | I.C. PHOTOTRANSISTOR | 66-599720 | | 4N25 | 1 | | | |
| 58 | | HEATSINK, TRANSISTOR | 66-899400 | AHAM | #364 | 1 | | | |
| 59 | | SILICONE ADHESIVE SEALANT | 88-298993 | DOW CORNING | RTV 3145 CLEAR | AR | | | |
| 60 | CR17 | DIODE | 66-305804 | UNITRODE | 1N5804 | 1 | | | |

| REVISIONS | | | | | |
|---|---|---|---|---|---|
| ZONE | LTR | DESCRIPTION | EO | DATE | APPROVED |
| D-4 | A | ADDED CR17, OUTPUT J2-2 WAS J3-3; OUTPUT J3-3 WAS J2-2. | | 7/8/76 | JHT |
| | B | VALUE CHANGED FOR R2-5, R8, R15 & R28. ADDED C8 & RELOCATED CR3. | —— | 10/22/76 | JHT |
| | C | INC E.O. | PS11805 | 3-29-77 | |
| | D | ADDED R38 & C9 | PS11896 | 5/13/77 | JHT |
| | E | INC E.O. | PS12240 | 12-6-77 | |

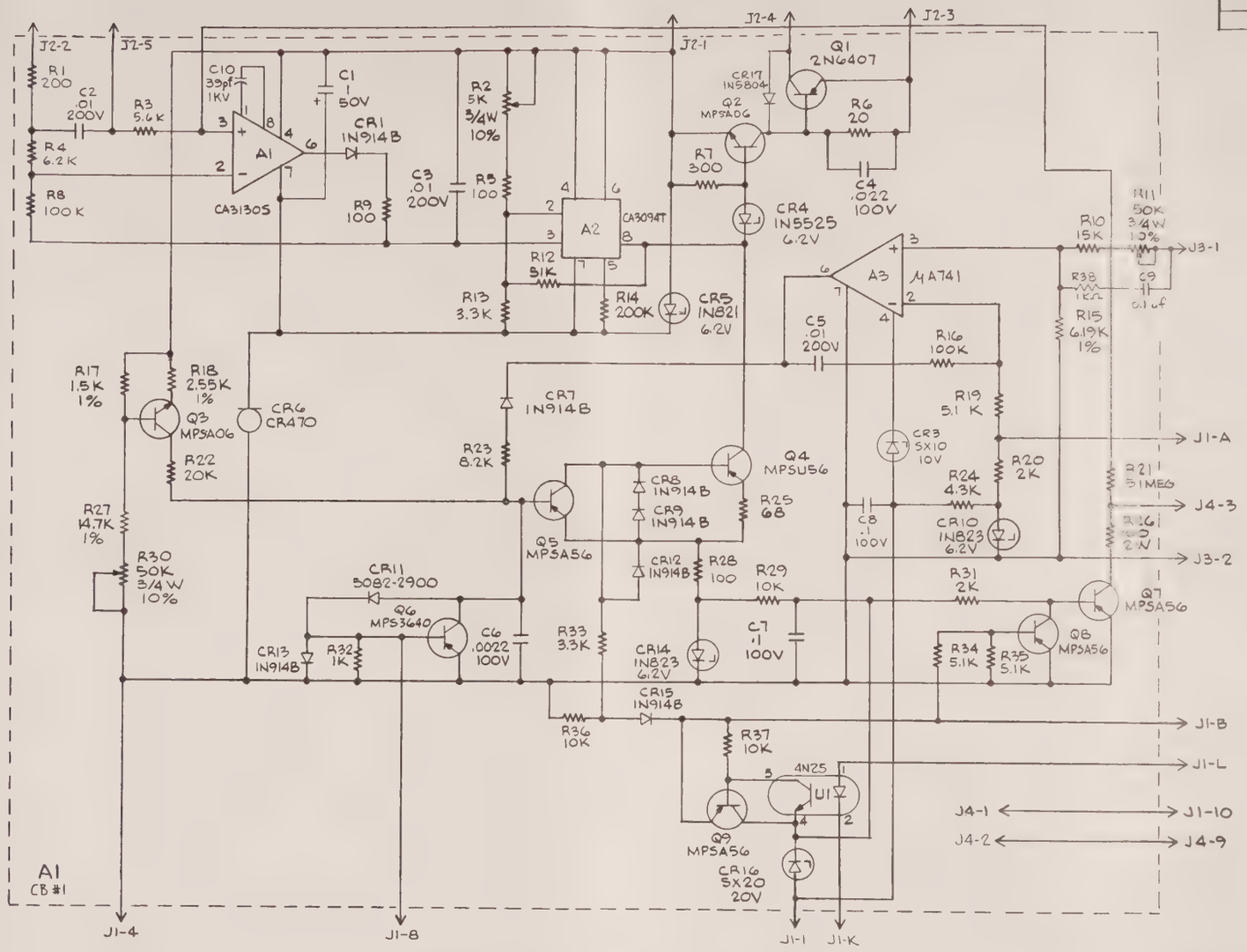


| REFERENCE DESIGNATIONS | |
|---|---|
| LAST USED | UNUSED |
| A3, C9, CR17 Q9, R38, U1 | |

1. UNLESS OTHERWISE SPECIFIED: ALL RESISTORS ARE IN OHMS 1/4 W, COMP., 5% & ALL CAPACITORS ARE IN MICROFARADS

NOTES:

| QTY | IDENTIFYING NUMBER | DESCRIPTION | CODE IDENT | ITEM |
|---|---|---|---|---|

LIST OF MATERIALS

| | | | |
|---|---|---|---|
| C112847 | | UNLESS OTHERWISE SPECIFIED DIMENSIONS ARE IN INCHES | |
| NEXT ASSEMBLY | USED ON | DECIMALS: 1PL ± .1 2PL ± .02 | |
| APPLICATION | | 3PL ± .005 | FRAC ± 1/64 |
| | | ANG ± 1° | SURFACE FINISH ✓ |
| | | MATERIAL | |
| | | SPEC NO | |
| | | FINISH | |

CONTRACT NUMBER

| | | |
|---|---|---|
| DR | F.GAMBLE | 5-27-76 |
| CHK | [signature] | 6/76 |
| APPD | [signature] | 11/15/76 |
| APPD | [signature] | 7/29/76 |

DESIGN ACTIVITY APPROVAL

CUSTOMER APPROVAL

varian — MICROWAVE EQUIPMENT OPERATIONS, SANTA CLARA, CALIFORNIA

# SCHEMATIC SWITCH REGULATOR PWB #1

| SIZE | CODE IDENT NO. | | |
|---|---|---|---|
| D | 99313 | 112844 | E |

SCALE ~ SHEET 1 OF 1

SUPERSEDES

112844

3440-09-04, 11/72

| REVISIONS | | | | | |
|---|---|---|---|---|---|
| ZONE | TR | DESCRIPTION | EO | DATE | APPROVED |
| | A | REVISED PER ARTWORK CHG'S | —— | 7-21-76 | JHT |
| | B | REMOVED SOLDER LUGS FROM E1 & E7. | —— | 11/2/76 | JHT |
| | C | REVISED PER E.O. | PS12674 | 8-7-78 | JHT |

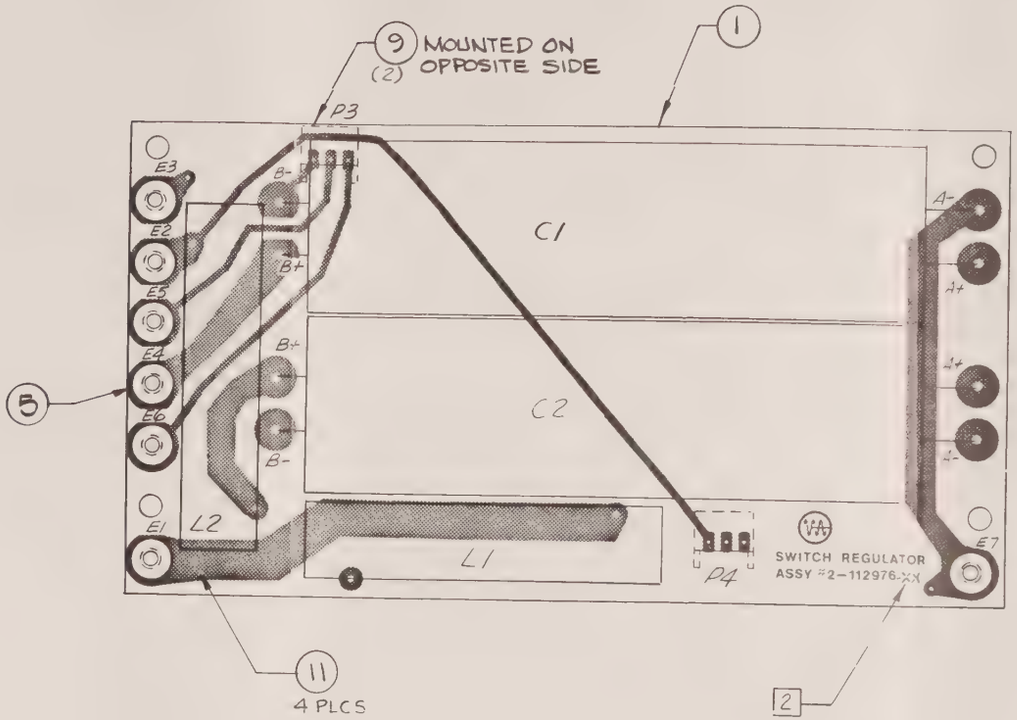


FOR LIST OF MATERIALS SEE SEPARATE LM-112976

| QTY | IDENTIFYING NUMBER | DESCRIPTION | CODE IDENT | ITEM |
|---|---|---|---|---|

LIST OF MATERIALS

[2] MARK CURRENT REVISION LETTER OF ASSY.

1. ASSEMBLE/ VARIAN WORKMANSHIP STD. 87-800-299

NOTES:

| | |
|---|---|
| C113015 | VEC-696106 |
| NEXT ASSEMBLY | USED ON |
| APPLICATION | |

UNLESS OTHERWISE SPECIFIED DIMENSIONS ARE IN INCHES
DECIMALS 1PL ± .1 2PL ± .02
3PL ± .005 ° FRAC ± 1/64
ANG ± 1 FINISH ✓
MATERIAL
SPEC NO
FINISH

CONTRACT NUMBER

| | | |
|---|---|---|
| DR | F. GAMBLE | 6-15-76 |
| CHK | JHT | 7/27/76 |
| APPD | [signature] | 11/15/76 |
| APPL | W I Berg | 7/29/76 |

DESIGN ACTIVITY APPROVAL
CUSTOMER APPROVAL

varian
MICROWAVE EQUIPMENT OPERATIONS
SANTA CLARA CALIFORNIA

# ASSEMBLY SWITCH REGULATOR PWB #2

| SIZE | CODE IDENT NO | | |
|---|---|---|---|
| C | 99313 | 112976 | C |

SCALE 2X SHEET 1 OF 1

3440-09-03 11/72 PRINTED IN U.S.A.

| varian | MICROWAVE EQUIPMENT OPERATIONS | TITLE: SWITCH REGULATOR PWB#2 | LM 112976 | REV C |
|---|---|---|---|---|
| CODE IDENT NO. 99313 | APPROVAL [illegible] DATE 7/6/76 | [illegible] 11/15/76 | | |

| APPLICATION | | | REVISION | | | | |
|---|---|---|---|---|---|---|---|
| NEXT ASSEMBLY | USED ON | EO | REV | DESCRIPTION | EO | DATE | APPROVED |
| C113015 | VEC-696506 | | A | REVISED | | 10/5/76 | MHS [illegible] |
| | | | B | REVISED | | 11/3/76 | |
| | | | C | REVISED PER E.O. | PS-12674 | 8-7-78 | [illegible] |

REVISION STATUS

| | | | | | | | | | | | | | | | | | | | | | | | | | | | | |
|---|---|---|---|---|---|---|---|---|---|---|---|---|---|---|---|---|---|---|---|---|---|---|---|---|---|---|---|---|
| SHEET | | | | | | | | | | | | | | | | | | | | | | | | | | | | |
| LTR | | | | | | | | | | | | | | | | | | | | | | | | | | | | |
| SHEET | | | | | | | | | | | | | | | | | | | | | | | | | | | | |
| LTR | | | | | | | | | | | | | | | | | | | | | | | | | | | | |
| SHEET | | | | | | | | | | | | | | | | | | | | | | | | | | | | |
| LTR | | | | | | | | | | | | | | | | | | | | | | | | | | | | |

varian | MICROWAVE EQUIPMENT OPERATIONS | SWITCH REGULATOR PWB #2 | LM 112976 | REV C

| ITEM NO. | REF DES | DESCRIPTION | VARIAN PART NO. | MFG | MFG OR MS PART NO. | QTY/DASH NO. -00 | -01 | -02 | -03 |
|---|---|---|---|---|---|---|---|---|---|
| 1 | | FAB, SWITCH REG. PWB #2 | C112975 | | | 1 | | | |
| 2 | | SCHEMATIC | C112973 | | | REF | | | |
| 3 | C1, C2 | CAPACITOR, 1300 µf, 75V | 41-503900 | SPRAGUE CDE | 604D132F075JT6 UFT1300-75 | 2 | | | |
| 4 | | | | | | | | | |
| 5 | E1-E7 | STANDOFF, SWAGED 6-32 x 3/8 | 22-419922 | USECO | B1530B-3/8-11 | 7 | | | |
| 6 | | | | | | | | | |
| 7 | L1,L2 | FILTER, CHOKE | 112920 | | | 2 | | | |
| 8 | | | | | | | | | |
| 9 | P3, P4 | CONNECTOR-PCB (3 CONTACT) | 51-407117 | MOLEX | 22-02-2031 | 2 | | | |
| 10 | | | | | | | | | |
| 11 | | WIRE, BUS, #20 AWG | 81-099920 | | | A/R | | | |
| 12 | | | | | | | | | |
| 13 | | | | | | | | | |
| 14 | | | | | | | | | |
| 15 | | | | | | | | | |
| 16 | | | | | | | | | |
| 17 | | | | | | | | | |
| 18 | | | | | | | | | |
| 19 | | | | | | | | | |
| 20 | | | | | | | | | |
| 21 | | | | | | | | | |

FORM 1758-02-375

| REVISIONS | | | | | |
|---|---|---|---|---|---|
| ZONE | LTR | DESCRIPTION | EO | DATE | APPROVED |
| | A | INC E.O. | PS11806 | 3-29-77 | |

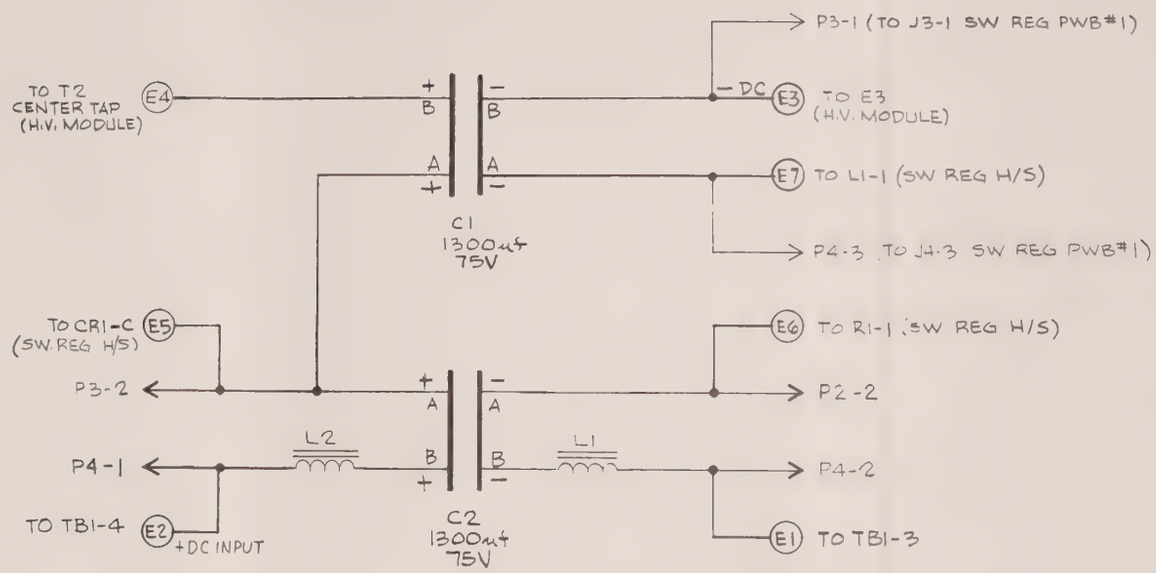


| REFERENCE DESIGNATIONS | |
|---|---|
| LAST USED | UNUSED |
| C2, E7, L2, P4 | P1, P2 |

| QTY | IDENTIFYING NUMBER | DESCRIPTION | CODE IDENT | ITEM |
|---|---|---|---|---|
| | | LIST OF MATERIALS | | |

| | |
|---|---|
| | |
| | |
| | |
| | |
| | |
| C112976 | VEC-6961L; |
| NEXT ASSEMBLY | USED ON |
| APPLICATION | |

UNLESS OTHERWISE SPECIFIED DIMENSIONS ARE IN INCHES
DECIMALS: 1PL ± .1 2PL ± .02
3PL ± .005 FRAC ± 1, 64
ANG ± 1° SURFACE FINISH ✓
MATERIAL
SPEC NO.
FINISH

| CONTRACT NUMBER | | |
|---|---|---|
| DR | F. GAMBLE | 6-16-76 |
| CHK | | 6-16-76 |
| APPD | | 11/16/76 |
| APPD | | 2/17/77 |
| DESIGN ACTIVITY APPROVAL | | |
| CUSTOMER APPROVAL | | |

varian
MICROWAVE EQUIPMENT OPERATIONS
SANTA CLARA, CALIFORNIA

# SCHEMATIC SWITCH REGULATOR PWB #2

| SIZE | CODE IDENT NO. | | |
|---|---|---|---|
| C | 99313 | 112973 | A |

SCALE ~ SHEET | OF |

SUPERSEDES

112973

3440-08-03 11/72 PRINTED IN U.S.A.

| REVISIONS | | | | | |
|---|---|---|---|---|---|
| ZONE | LTR | DESCRIPTION | EO | DATE | APPROVED |
| | F | INC E.O. | PS12424 | 3-31-78 | [illegible] |

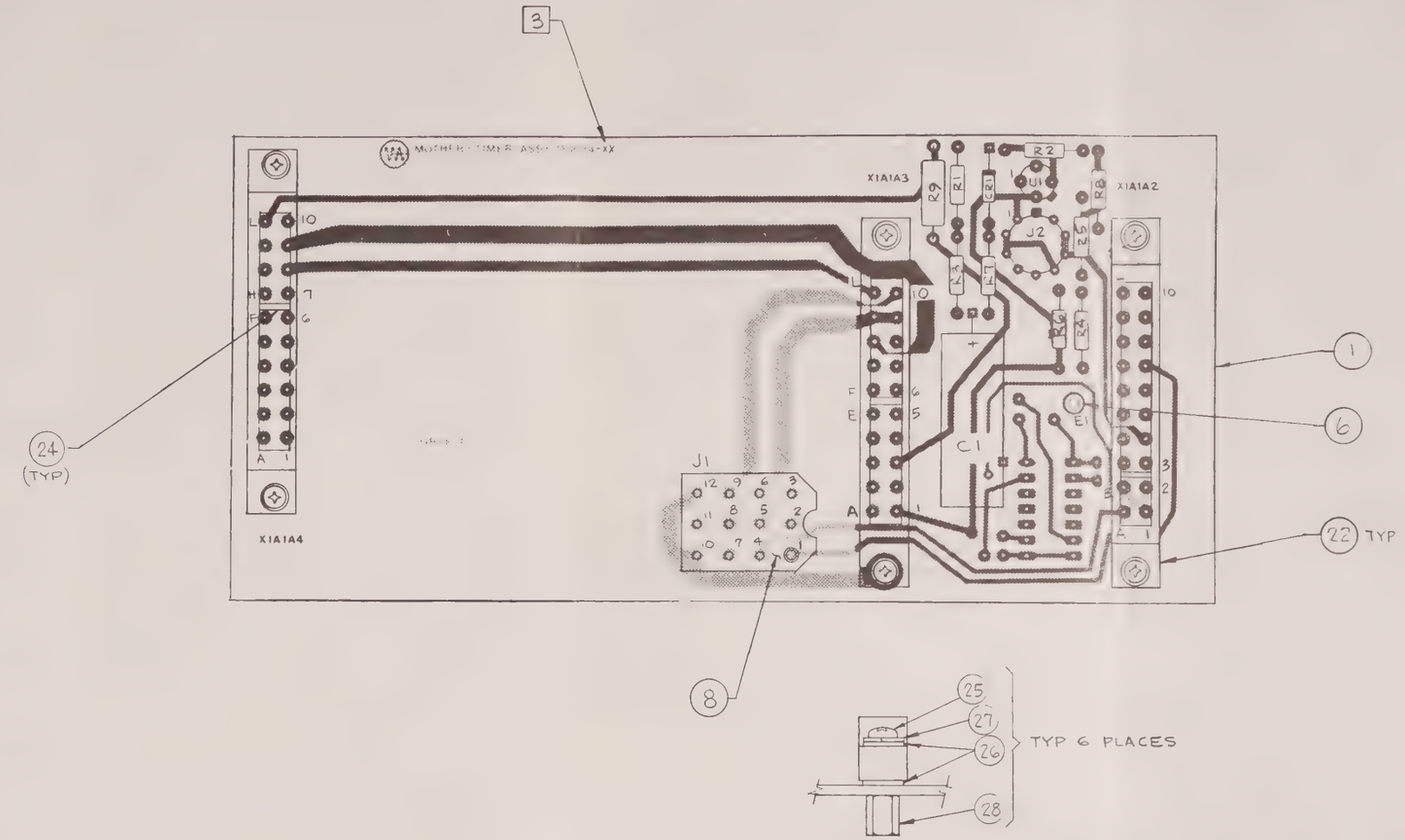


FOR LIST OF MATERIALS SEE SEPARATE LM 3[illegible]

| QTY | IDENTIFYING NUMBER | DESCRIPTION | CODE IDENT | ITEM |
|---|---|---|---|---|

LIST OF MATERIALS

| | |
|---|---|
| E112822 | VBC-6961D6 |
| NEXT ASSEMBLY | USED ON |
| APPLICATION | |

UNLESS OTHERWISE SPECIFIED DIMENSIONS ARE IN INCHES

DECIMALS: 1PL ± .1 2PL ± .02

3PL ± .005 FRAC ± 1 64

ANG ± 1° SURFACE FINISH ✓

MATERIAL

SPEC NO

FINISH

CONTRACT NUMBER

| | | |
|---|---|---|
| DR | F.GAMBLE | 6-13-76 |
| CHK | [illegible] | 6-[illegible]-76 |
| APPD | [illegible] | 11/16/76 |
| APPD | WI [illegible] | 7/[illegible]/76 |

DESIGN ACTIVITY APPROVAL

CUSTOMER APPROVAL

varian

MICROWAVE EQUIPMENT OPERATIONS
SANTA CLARA, CALIFORNIA

ASSEMBLY
MOTHER/TIMER PWB

| SIZE | CODE IDENT NO | | |
|---|---|---|---|
| C | 99313 | 113034 | F |

SCALE 2:1 SHEET 1 OF 1

SUPERSEDES

3 MARK CURRENT REVISION LETTER OF ASSEMBLY.

2. R1, R5, R6 & R7 ARE TYPICAL VALUES. FINAL VALUES ARE D.I.T..

1. ASSEMBLE, VARIAN WORKMANSHIP STD. 67-800-1072.

NOTES:

3440-09-03 11/72 PRINTED IN U.S.A.

| varian | MICROWAVE EQUIPMENT OPERATIONS | ASSEMBLY MOTHER/TIMER PWB | LM 113034 | REV F |
|---|---|---|---|---|

| ITEM NO | REF DES | DESCRIPTION | VARIAN PART NO. | MFG | MFG OR MS PART NO. | QTY/DASH NO. -00 | -01 | -02 | -03 |
|---|---|---|---|---|---|---|---|---|---|
| 1 | | FAB, MOTHER/TIMER PWB | C113033-00 | | | 1 | | | |
| 2 | | SCHEMATIC | C113031 | | | REF | | | |
| 3 | C1 | CAPACITOR, 140 µf, 20V | 41-506124 | SPRAGUE | 600D147G020DE4 | 1 | | | |
| 4 | | | | | | | | | |
| 5 | CR1 | DIODE | 66-981103 | HEWLETT PACKARD | HP5082-2900 | 1 | | | |
| 6 | E1 | TERMINAL | 16-229946 | USECO | 2011B-1 | 1 | | | |
| 7 | | | | | | | | | |
| 8 | J1 | CONNECTOR, WAFER - 12 PIN | 51-407039 | MOLEX | 09-18-5121 | 1 | | | |
| 9 | | | | | | | | | |
| 10 | R1 | RESISTOR, 100 NOM, 1/4W | 32-301310 (*) | | RC07GF101J | 1 | | | |
| 11 | R2 | RESISTOR, 10K, 1/4W, COMP, 5% | 32-301510 | | RC07GF103J | 1 | | | |
| 12 | R3 | RESISTOR, 3.3M, 1/4W, COMP, 5% | 32-301733 | | RC07GF335J | 1 | | | |
| 13 | R4 | RESISTOR, 2K, 1/4W, COMP, 5% | 32-301420 | | RC07GF202J | 1 | | | |
| 14 | R5 | RESISTOR, 150Ω, 1/4W (DIT) | 32-301315 (*) | | RC07GF151J | 1 | | | |
| 15 | R6 | RESISTOR, 10 NOM,1/4W | 32-301210 (*) | | RC07GF100J | 1 | | | |
| 16 | R7 | RESISTOR, 220K, 1/4W (DIT) | 32-301224 (*) | | RC07GF224J | 1 | | | |
| 17 | R8 | RESISTOR, 100K, 1/4W, COMP, 5% | 32-301610 | | RC07GF104J | 1 | | | |
| 18 | R9 | RESISTOR, 560 OHM, 1/2W, COMP, 5% | 32-201356 | | RC20GF561J | 1 | | | |
| 19 | U1 | TRANSISTOR, SILICON FIELD EFFECT | 62-798124 | MOTOROLA | 3N171 | 1 | | | |
| 20 | U2 | TIME DELAY | 62-600444 | NATIONAL SEMI | LM322H | 1 | | | |
| 21 | | | | | | | | | |

FORM 1758 02-375

(*) DETERMINE IN TEST

| varian | MICROWAVE EQUIPMENT OPERATIONS | TITLE: ASSEMBLY, MOTHER/TIMER PWB | LM 113034 | REV F |
|---|---|---|---|---|
| CODE IDENT NO. 99313 | APPROVAL | DATE 11/9/76 | | |

| APPLICATION | | | REVISION | | | | |
|---|---|---|---|---|---|---|---|
| NEXT ASSEMBLY | USED ON | EO | REV | DESCRIPTION | EO | DATE | APPROVED |
| E112822 | VZC-6961D6 | | A | ADDED R9 | — | 6-22-76 | |
| | | | B | REVISED | --- | 10/8/76 | |
| | | | C | INC E.O. | PS11968 | 6/9/77 | |
| | | | D | INC E.O. | PS11999 | 7/15/77 | |
| | | | E | INC E.O. | PS12092 | 8-5-77 | |
| | | | F | INC E.O. | PS12424 | 3-31-78 | |

REVISION STATUS

| | | | | | | | | | | | | | | | | | | | | | | | | | | | |
|---|---|---|---|---|---|---|---|---|---|---|---|---|---|---|---|---|---|---|---|---|---|---|---|---|---|---|---|
| SHEET | | | | | | | | | | | | | | | | | | | | | | | | | | | |
| LTR | | | | | | | | | | | | | | | | | | | | | | | | | | | |
| SHEET | | | | | | | | | | | | | | | | | | | | | | | | | | | |
| LTR | | | | | | | | | | | | | | | | | | | | | | | | | | | |
| SHEET | | | | | | | | | | | | | | | | | | | | | | | | | | | |
| LTR | | | | | | | | | | | | | | | | | | | | | | | | | | | |

| varian | MICROWAVE EQUIPMENT OPERATIONS | ASSEMBLY MOTHER/TIMER PWB | LM 113034 | REV F |
|---|---|---|---|---|

| ITEM NO. | REF DES | DESCRIPTION | VARIAN PART NO. | MFG | MFG OR MS PART NO. | QTY/DASH NO. -00 | -01 | -02 | -03 |
|---|---|---|---|---|---|---|---|---|---|
| 22 | X1A1A2-X1A1A4 | CONNECTOR, 10/20 CONTACTS | 51-408430 | VIKING | 2VK10D/6-2 | 3 | | | |
| 23 | | | | | | | | | |
| 24 | | KEY, POLARIZING | 51-959930 | VIKING | 091-0024-000 | 3 | | | |
| 25 | | SCREW 4-40 x 1/2 PAN PH | 12-222004-08 | | | 6 | | | |
| 26 | | WASHER #4, PLAIN | 14-122004 | | | 12 | | | |
| 27 | | WASHER #4, LOCK | 14-202004 | | | 6 | | | |
| 28 | | STANDOFF 4-40 x 1/4 LG | 22-429900 | | | 6 | | | |
| 29 | | | | | | | | | |
| | | | | | | | | | |
| | | | | | | | | | |
| | | | | | | | | | |
| | | | | | | | | | |
| | | (*) DETERMINED IN TEST | | | | | | | |
| | | | | | | | | | |
| | | | | | | | | | |
| | | | | | | | | | |
| | | | | | | | | | |
| | | | | | | | | | |
| | | | | | | | | | |
| | | | | | | | | | |
| | | | | | | | | | |

| REVISIONS | | | | | |
|---|---|---|---|---|---|
| ZONE | LTR | DESCRIPTION | EO | DATE | APPROVED |
| | A | ADDED R9 ; REVISED | | 6/22/76 | JHT |
| | B | REVISED | ——— | 11/4/76 | JHT |
| | C | REVISED PER E.O. | PS12092 | 8-5-77 | |
| | D | INC E O. | PS12424 | 3-31 78 | |

J1-1 ⟷ X1A1A2-7
X1A1A2-A ⟷ J1-4
X1A1A3-2 ⟷ X1A1A2-1
X1A1A2-B ⟷ X1A1A3-B
X1A1A2-3 ⟷ X1A1A3-3
R9 560Ω, 1/2W → X1A1A4-L
X1A1A2-8&5 J1-10&12 ⟷ ⏚
X1A1A2-10 ⟷ X1A1A4-K
X1A1A3-1 ⟷ ⏚
X1A1A2-6 ⟷ OE1
X1A1A3-D ⟷ X1A1A4-1
X1A1A3-5 ⟷ J1-3
X1A1A3-6 ⟷ J1-6
X1A1A3-H ⟷ X1A1A4-10
X1A1A3-7 ⟷ J1-9
X1A1A3-J ⟷ X1A1A4-9
X1A1A3-9&K ⟷ J1-5
X1A1A3-L ⟷ X1A1A4-8
X1A1A3-10 ⟷ J1-8
X1A1A4-B ⟷ J1-2

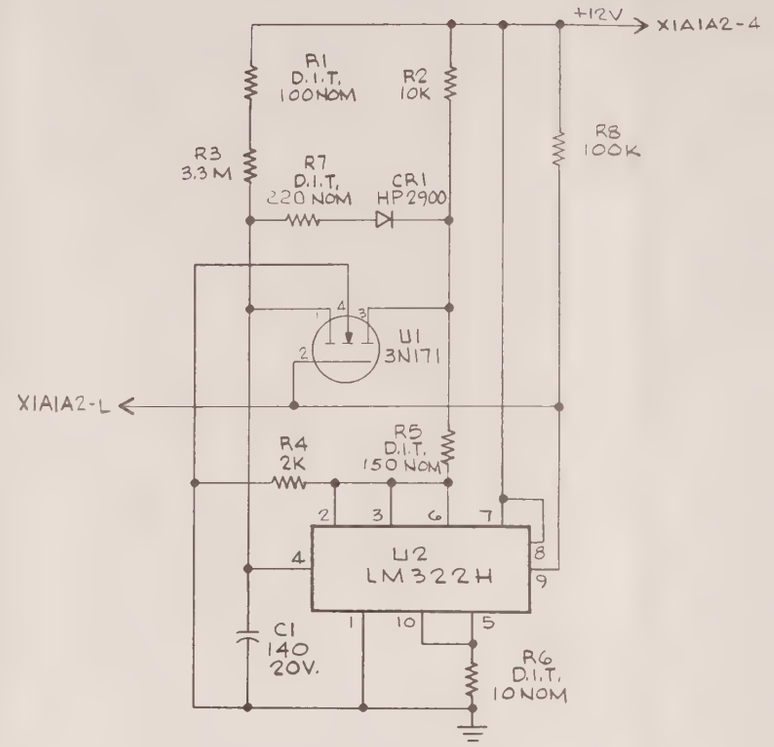


| REFERENCE DESIGNATIONS | |
|---|---|
| LAST USED | UNUSED |
| C1, CR1, J1, R9 U2, X1A1A4 | X1A1A1 |

1. UNLESS OTHERWISE SPECIFIED: ALL RESISTORS ARE IN OHMS, 1/4 W, COMP, 5%, AND ALL CAPACITORS ARE IN MICROFARADS.

NOTES:

| QTY | IDENTIFYING NUMBER | DESCRIPTION | CODE IDENT | ITEM |
|---|---|---|---|---|

LIST OF MATERIALS

| | |
|---|---|
| C113034 | VEC-6961D6 |
| NEXT ASSEMBLY | USED ON |
| APPLICATION | |

UNLESS OTHERWISE SPECIFIED DIMENSIONS ARE IN INCHES
DECIMALS: 1PL ± .1 2PL ± .02
3PL ± .005 FRAC ± 1/64
ANG ± 1° SURFACE FINISH ✓
MATERIAL
SPEC NO
FINISH

CONTRACT NUMBER

| | | |
|---|---|---|
| DR | F. GAMBLE | 6/15/76 |
| CHK | J.T. Day | 6-16-76 |
| APPD | | 11/14/76 |
| APPD | W. Berg | 8/17/76 |

DESIGN ACTIVITY APPROVAL
CUSTOMER APPROVAL

varian
MICROWAVE EQUIPMENT OPERATIONS
SANTA CLARA, CALIFORNIA

# SCHEMATIC MOTHER / TIMER PWB

| SIZE | CODE IDENT NO. | | |
|---|---|---|---|
| C | 99313 | 113031 | D |

SCALE ~ SHEET 1 OF 1

SUPERSEDES

113031

3440-09-03 11/72 PRINTED IN U.S.A.

| REVISIONS | | | | | |
|---|---|---|---|---|---|
| ZONE | LTR | DESCRIPTION | EO | DATE | APPROVED |
| | A | REVISED | | 7/22/76 | FG |
| | B | INC E O | PS11417 | 8/17/76 | M'S |
| | C | INCORPORATED E.O. | PS11486 | 11/2/76 | JHT |
| | D | INC. E.O. PS11813 & PS11914 | | 7-11-77 | TE |
| | E | DELETED ITEMS 617, TERMINALS | PS12253 | 12-9-77 | |
| | F | INC E.O. | PS12458 | 9-13-78 | TE |
| | G | INC E.O. | PS12775 | 9-13-78 | TE |

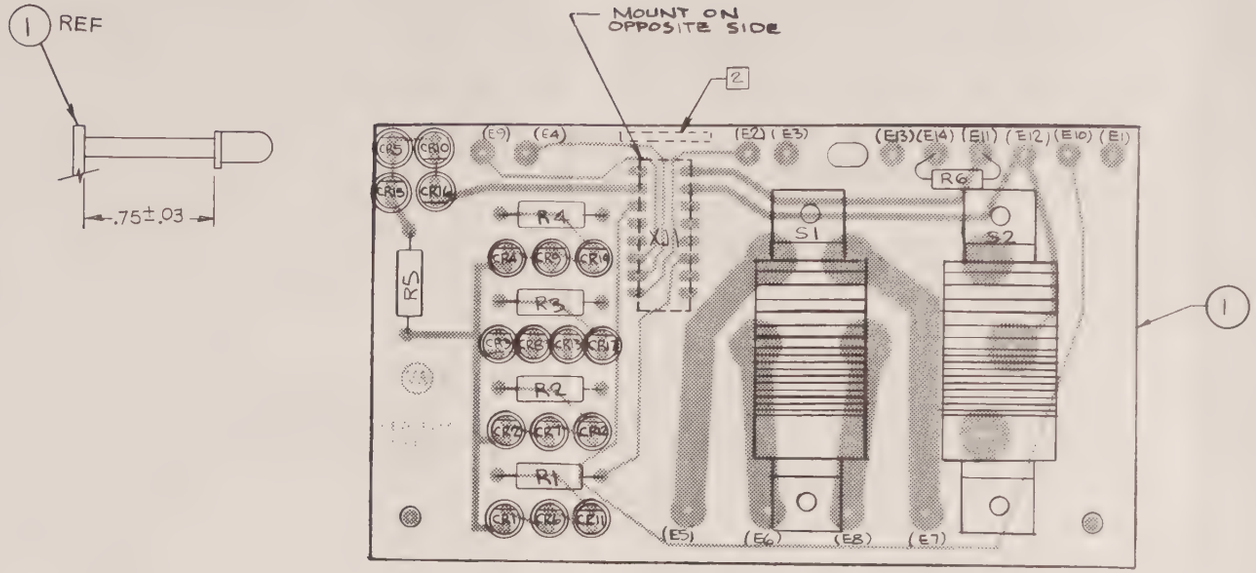


SEE SEPARATE LIST OF MATERIALS — LM113003

| QTY | IDENTIFYING NUMBER | DESCRIPTION | CODE IDENT | ITEM |
|---|---|---|---|---|
| LIST OF MATERIALS | | | | |

| | | |
|---|---|---|
| E112822 | VEC-6961DG | |
| NEXT ASSEMBLY | USED ON | |
| APPLICATION | | |

UNLESS OTHERWISE SPECIFIED DIMENSIONS ARE IN INCHES
DECIMALS 1PL ± .1 2PL ± .02
3PL ± .005 FRAC ± 1/64
ANG ± 1 SURFACE FINISH ✓
MATERIAL
SPEC NO
FINISH

CONTRACT NUMBER

| | | |
|---|---|---|
| DR | F.GAMBLE | 7-22-76 |
| CHK | | 7-25-76 |
| APPD | | 11/16/76 |
| APPD | W I Bea | 7/27/76 |

DESIGN ACTIVITY APPROVAL
CUSTOMER APPROVAL

varian — MICROWAVE EQUIPMENT OPERATIONS SANTA CLARA CALIFORNIA

ASSEMBLY
LED PWB

| SIZE | CODE IDENT NO | |
|---|---|---|
| C | 99313 | 113003 G |

SCALE — X | SHEET 1 OF 1

SUPERSEDES

2. MARK WITH CURRENT ASSY REVISION LETTER.
1. ASSEMBLE/VARIAN WORKMANSHIP STD 87-800-192.
NOTES:

3440-08-03 11/72 PRINTED IN U.S.A.

| varian | MICROWAVE EQUIPMENT OPERATIONS | TITLE: ASSEMBLY LED PWB | LM 113003 | REV G |
|---|---|---|---|---|
| CODE IDENT NO. 99313 | APPROVAL W I B-y DATE 7/6/76 | [illegible] 11/1/76 | | |

APPLICATION

| NEXT ASSEMBLY | USED ON | EO |
|---|---|---|
| | VZC-6961D6 | |
| | | |
| | | |

REVISION

| REV | DESCRIPTION | EO | DATE | APPROVED |
|---|---|---|---|---|
| A | REVISED | | 7/22/76 | FG |
| B | INC E.O | PS 11417 | 8/17/76 | MS |
| C | INC E.O. | PS 11486 | 11/4/76 | M |
| D | INC E.O.s | PS 11813 PS 11914 | 2/11/77 | MS |
| E | DELETED ITEMS 6 & 7, TERMINALS | PS12255 | 12-9-77 | [illegible] |
| F | INC E.O. | PS 12458 | 9-14-78 | MS |
| G | INC E.O. | PS 12775 | 9-14-78 | MS |

REVISION STATUS

| | | | | | | | | | | | | | | | | | | | | | | | | | | |
|---|---|---|---|---|---|---|---|---|---|---|---|---|---|---|---|---|---|---|---|---|---|---|---|---|---|---|
| SHEET | | | | | | | | | | | | | | | | | | | | | | | | | | |
| LTR | | | | | | | | | | | | | | | | | | | | | | | | | | |
| SHEET | | | | | | | | | | | | | | | | | | | | | | | | | | |
| LTR | | | | | | | | | | | | | | | | | | | | | | | | | | |
| SHEET | | | | | | | | | | | | | | | | | | | | | | | | | | |
| LTR | | | | | | | | | | | | | | | | | | | | | | | | | | |

varian | MICROWAVE EQUIPMENT OPERATIONS | ASSEMBLY, LED PWB | LM 113003 | REV G

| ITEM NO | REF DES | DESCRIPTION | VARIAN PART NO. | MFG | MFG OR MS PART NO. | QTY/DASH NO. -00 | -01 | -02 | -03 |
|---|---|---|---|---|---|---|---|---|---|
| 1 | | FAB., LED PWB | C113002 | | | 1 | | | |
| 2 | | SCHEMATIC | C113000 | | | ref | | | |
| 3 | CR1,4-6, 9-11,14-16 | DIODE, LED - RED | 67-499834 | MONSANTO | MV5752 | 10 | | | |
| 4 | CR2,7,12 | DIODE, LED - GREEN | 67-499838 | MONSANTO | MV5252 | 3 | | | |
| 5 | CR3,8,13 17 | DIODE, LED - AMBER | 67-499828 | MONSANTO | MV5152 | 4 | | | |
| 6 | | | | | | | | | |
| 7 | | | | | | | | | |
| 8 | XJ1 | SOCKET, CONNECTOR, 16 PIN | 54-634008 | SAE | CSA3100-16B | 1 | | | |
| 9 | | | | | | | | | |
| 10 | R6 | RESISTOR, 1K, 1/4W, 5% | 32-301410 | | RC07GF102J | 1 | | | |
| 11 | R1,2,4 | RESISTOR, 200Ω, 1/2W, 5% | 32-201320 | | RC20GF201J | 3 | | | |
| 12 | R3,5 | RESISTOR, 150Ω, 1/2W, 5% | 32-201315 | | RC20GF151J | 2 | | | |
| 13 | | | | | | | | | |
| 14 | S1 | SWITCH | 71-219811 | C&H | 8142K21E6M52 | 1 | | | |
| 15 | S2 | SWITCH | 71-219810 | C&H | 8134K22A1M52 | 1 | | | |
| 16 | | | | | | | | | |
| 17 | | | | | | | | | |
| 18 | | | | | | | | | |
| 19 | | | | | | | | | |
| 20 | | | | | | | | | |
| 21 | | | | | | | | | |

| REVISIONS | | | | | |
|---|---|---|---|---|---|
| ZONE | LTR | DESCRIPTION | EO | DATE | APPROVED |
| | A | REVISED | — | 6-25-76 | |
| | B | ADDED BLOWER & TWT OVERTEMP S/W CIRCUITS | — | 11/4/76 | JMT |
| | C | INC E.O. | PS11808 | 3-29-77 | |
| | D | INC E.O. | PS11884 | 6-22-77 | |
| | E | INC E.O. | PS12775 | 9-13-78 | |

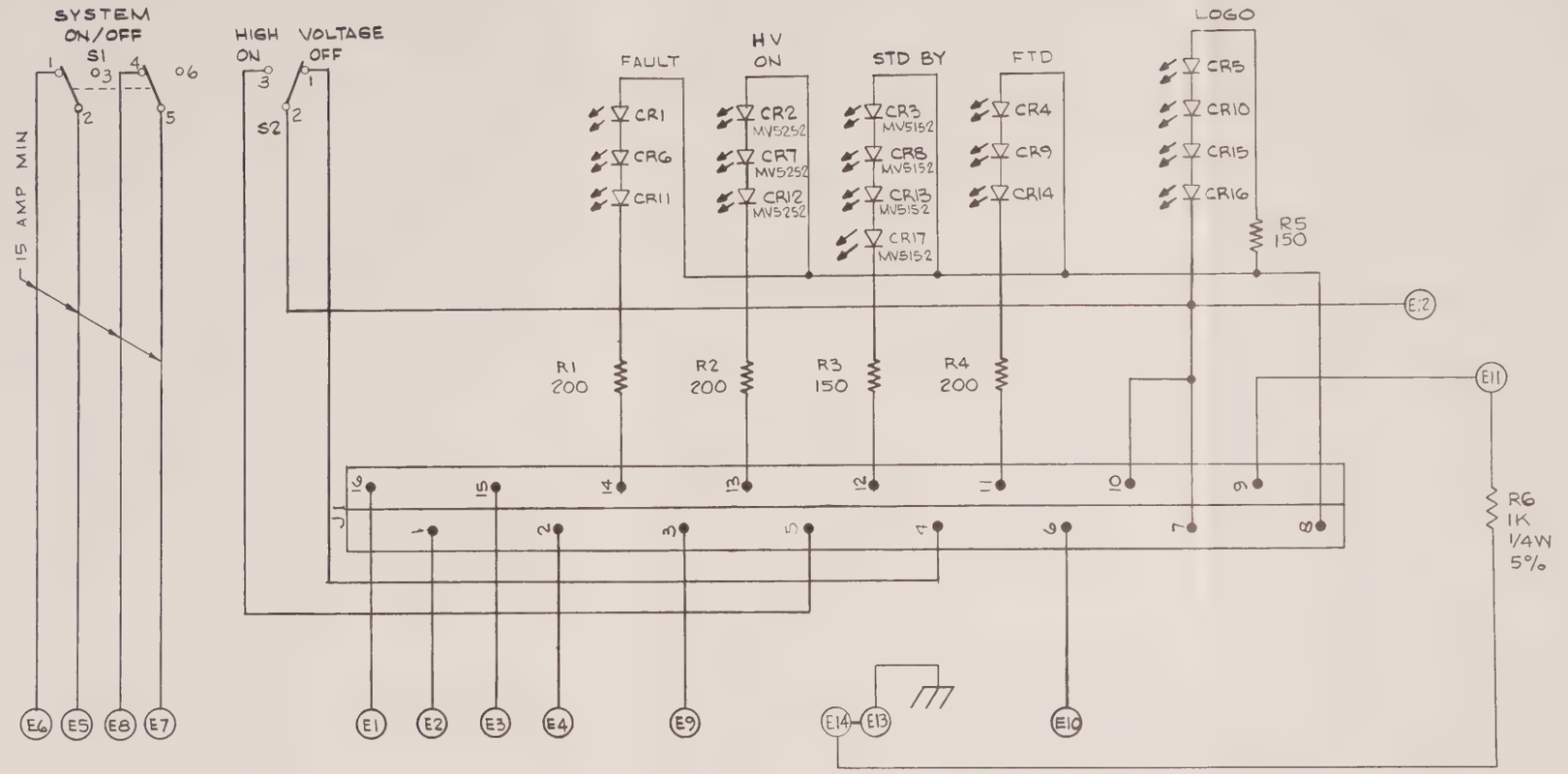


NOTES: UNLESS OTHERWISE SPECIFIED:
1. ALL RESISTORS ARE IN Ω's, ½W COMP.
2. ALL LED'S ARE MV 5752

| QTY | IDENTIFYING NUMBER | DESCRIPTION | CODE IDENT | ITEM |
|---|---|---|---|---|

LIST OF MATERIALS

| | |
|---|---|
| C113003 | VEC-6961 D6 |
| NEXT ASSEMBLY | USED ON |
| APPLICATION | |

UNLESS OTHERWISE SPECIFIED DIMENSIONS ARE IN INCHES
DECIMALS: 1PL ± .1 2PL ± .02
3PL ± .005 FRAC ± 1/64
ANG ± 1° SURFACE FINISH ✓
MATERIAL
SPEC NO
FINISH

CONTRACT NUMBER

| | | |
|---|---|---|
| DR | F. GAMBLE | 4-14-76 |
| CHK | | 6-3-76 |
| APPD | | 11/5/76 |
| APPD | W I Bey | 8/17/78 |

DESIGN ACTIVITY APPROVAL
CUSTOMER APPROVAL

varian
MICROWAVE EQUIPMENT OPERATIONS
SANTA CLARA, CALIFORNIA

SCHEMATIC
LED
PWB

| SIZE | CODE IDENT NO. | | |
|---|---|---|---|
| C | 99313 | 113000 | E |

SCALE 2 SHEET 1 OF 1

SUPERSEDES

3440-09-03 11/72 PRINTED IN U.S.A.

113000

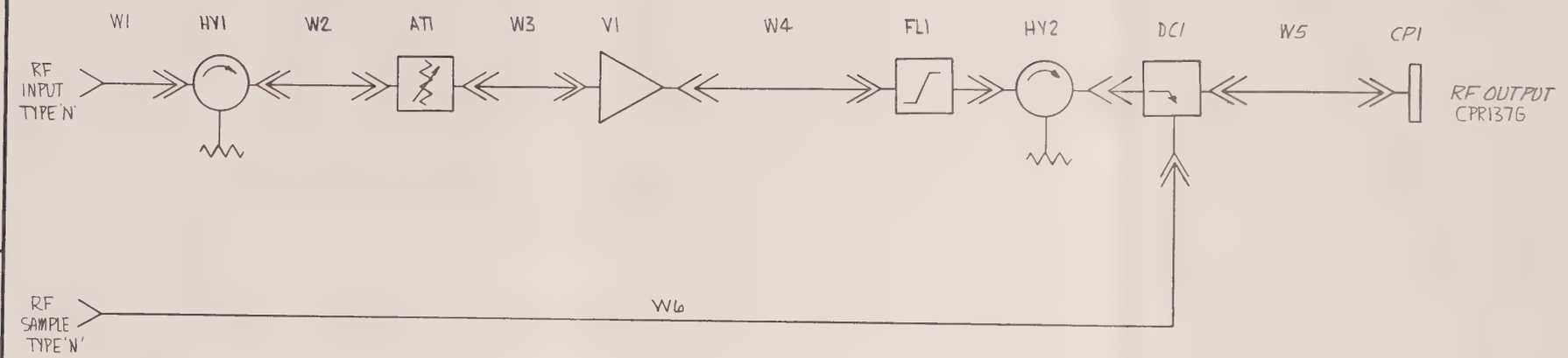


FIGURE 5-1

| REVISIONS | | | | | |
|---|---|---|---|---|---|
| ZONE | LTR | DESCRIPTION | EO | DATE | APPROVED |

| QTY | IDENTIFYING NUMBER | DESCRIPTION | CODE IDENT | ITEM |
|---|---|---|---|---|

LIST OF MATERIALS

| | |
|---|---|
| 112850-01 | |
| 112850-00 | VZC6961D6 |
| NEXT ASSEMBLY | USED ON |
| APPLICATION | |

UNLESS OTHERWISE SPECIFIED DIMENSIONS ARE IN INCHES
DECIMALS: 1PL ± .1 2PL ± .02
3PL ± .005 FRAC ± 1/64
ANG ± 1° SURFACE FINISH ✓
MATERIAL
SPEC NO.
FINISH

CONTRACT NUMBER

| | | |
|---|---|---|
| DR | DMount | 6-16-76 |
| CHK | | 8-16-76 |
| APPD | | 11/8/76 |
| APPD | WIBerg | 8/17/76 |

DESIGN ACTIVITY APPROVAL

CUSTOMER APPROVAL

varian
MICROWAVE EQUIPMENT OPERATIONS
SANTA CLARA, CALIFORNIA

TWT AMPLIFIER
RF SCHEMATIC

| SIZE | CODE IDENT NO | |
|---|---|---|
| C | 99313 | 112866 |

SCALE | SHEET OF

SUPERSEDES

112866

3440-09-03 11/72 PRINTED IN U.S.A.

| REVISIONS | | | | | |
|---|---|---|---|---|---|
| ZONE | LTR | DESCRIPTION | EO | DATE | APPROVED |
| | A | REVISED | | 6/25/76 | JHT |

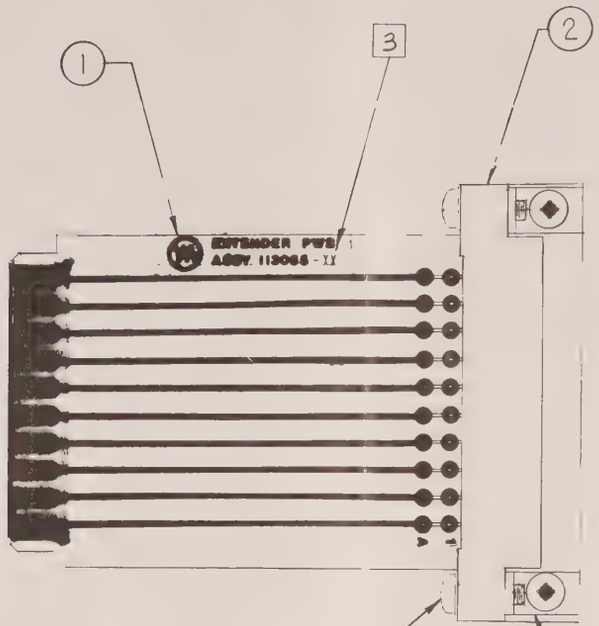


SEE SEPERATE LIST OF MATERIALS LM-113055

| QTY | IDENTIFYING NUMBER | DESCRIPTION | CODE IDENT | ITEM |
|---|---|---|---|---|

LIST OF MATERIALS

| | |
|---|---|
| E112850 | VEC-6961 D6 |
| NEXT ASSEMBLY | USED ON |
| APPLICATION | |

UNLESS OTHERWISE SPECIFIED DIMENSIONS ARE IN INCHES
DECIMALS: 1PL ± .1 2PL ± .02
3PL ± .005 FRAC ± 1/64
ANG ± 1° SURFACE FINISH ✓
MATERIAL
SPEC NO.
FINISH

CONTRACT NUMBER

| | | |
|---|---|---|
| DR | F. GAMBLE | 5-21-76 |
| CHK | | 6-14-76 |
| APPD | | 11/8/76 |
| APPD | W I Berg | 7/27/76 |

DESIGN ACTIVITY APPROVAL
CUSTOMER APPROVAL

varian
MICROWAVE EQUIPMENT OPERATIONS
SANTA CLARA, CALIFORNIA

# ASSEMBLY, EXTENDER PWB

| SIZE | CODE IDENT NO. | | |
|---|---|---|---|
| C | 99313 | 113055 | A |

SCALE 2:1 SHEET OF

SUPERSEDES

[3] MARK CURRENT REVISION LETTER OF ASSY.
2. ASSEMBLE USING HARDWARE/DWG 110625
1. ASSEMBLE/VARIAN WORKMANSHIP STD 87-800-192
NOTES:

3440-09-03 11/72 PRINTED IN U.S.A.

113055

| varian | MICROWAVE EQUIPMENT OPERATIONS | TITLE: EXTENDER CARD | LM 113055 | REV A |
|---|---|---|---|---|
| CODE IDENT NO. 99313 | APPROVAL W/Bay DATE 7-1-6 | [signature] 11/18/76 | | |

| APPLICATION | | | REVISION | | | | |
|---|---|---|---|---|---|---|---|
| NEXT ASSEMBLY | USED ON | EO | REV | DESCRIPTION | EO | DATE | APPROVED |
| E112822 | VZC-6961D6 | | | | | | |
| | | | | | | | |
| | | | | | | | |

REVISION STATUS

| | | | | | | | | | | | | | | | | | | | | | | | | | | |
|---|---|---|---|---|---|---|---|---|---|---|---|---|---|---|---|---|---|---|---|---|---|---|---|---|---|---|
| SHEET | | | | | | | | | | | | | | | | | | | | | | | | | | |
| LTR | | | | | | | | | | | | | | | | | | | | | | | | | | |
| SHEET | | | | | | | | | | | | | | | | | | | | | | | | | | |
| LTR | | | | | | | | | | | | | | | | | | | | | | | | | | |
| SHEET | | | | | | | | | | | | | | | | | | | | | | | | | | |
| LTR | | | | | | | | | | | | | | | | | | | | | | | | | | |

varian | MICROWAVE EQUIPMENT OPERATIONS | EXTENDER CARD | LM 113055 | REV A

| ITEM NO | REF DES | DESCRIPTION | VARIAN PART NO | MFG | MFG OR MS PART NO. | QTY/DASH NO -00 | -01 | -02 | -03 |
|---|---|---|---|---|---|---|---|---|---|
| 1 | | FABRICATION, EXTENDER PWB | C113054 | | | 1 | | | |
| 2 | | CONNECTOR 10/20 | 51-406614 | AMPHENOL | 225-21021-105 | 1 | | | |
| 3 | | BRACKET | 22-399862 | ZIERICK | 676 | 2 | | | |
| 4 | | | | | | | | | |
| 5 | | | | | | | | | |
| 6 | | | | | | | | | |
| 7 | | | | | | | | | |
| 8 | | | | | | | | | |
| 9 | | | | | | | | | |
| 10 | | | | | | | | | |
| | | | | | | | | | |
| | | | | | | | | | |
| | | | | | | | | | |
| | | | | | | | | | |
| | | | | | | | | | |
| | | | | | | | | | |
| | | | | | | | | | |
| | | | | | | | | | |
| | | | | | | | | | |
| | | | | | | | | | |
| | | | | | | | | | |

| REVISIONS | | | | | |
|---|---|---|---|---|---|
| ZONE | LTR | DESCRIPTION | EO | DATE | APPROVED |
| | A | INC E.O. | PS12130 | 9-7-77 | TE |
| | B | INC E.O. | PS12406 | 9-20-78 | TE |
| | C | INC E.O. | PS12466 | 9-20-78 | TE |
| | D | INC E.O. | PS12591 | 9-20-78 | TE |
| | E | INC E.O. | PS12606 | 9-2078 | TE |

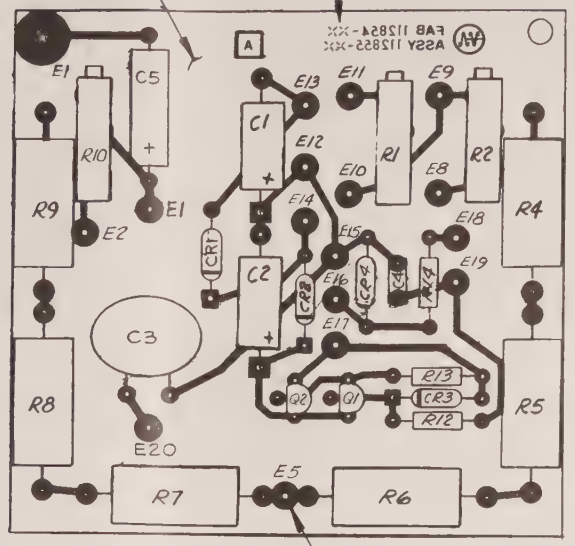


SEE SEPARATE LIST OF MATERIALS - LM112855

| QTY | IDENTIFYING NUMBER | DESCRIPTION | CODE IDENT | ITEM |
|---|---|---|---|---|
| | | LIST OF MATERIALS | | R-5 |

| | | | |
|---|---|---|---|
| | | UNLESS OTHERWISE SPECIFIED DIMENSIONS ARE IN INCHES | CONTRACT NUMBER |
| | | DECIMALS: 1PL ± .1 2PL ± .02 | DR J.H. Gray 10-15-76 |
| | | 3PL ± .005 FRAC ± 1/64 | CHK JHT 3/21/77 |
| | | ANG ± 1° SURFACE FINISH ✓ | APPD [signature] 3/21/77 |
| | | MATERIAL | APPD WADSWORTH 3/21/77 |
| | V2C-6961 D6 | | DESIGN ACTIVITY APPROVAL |
| NEXT ASSEMBLY | USED ON | SPEC NO | CUSTOMER APPROVAL |
| APPLICATION | | FINISH | |

varian — MICROWAVE EQUIPMENT OPERATIONS SANTA CLARA, CALIFORNIA

# ASSEMBLY GRID/ANODE PCB

| SIZE | CODE IDENT NO | | |
|---|---|---|---|
| C | 99313 | 112855 | E |

SCALE 2X — SHEET 1 OF 1

SUPERSEDES

2. MARK CURRENT REVISION LETTER OF ASSEMBLE - FARSIDE OF BD.

NOTES:
1. ASSEMBLE/VARIAN WORKMANSHIP STANDARDS MANUAL 87-800-192.

3440-09-03 11/72 PRINTED IN U.S.A

112855

| varian | MICROWAVE EQUIPMENT OPERATIONS | GRID ANODE ASSY | LM 112855 | REV E |
|---|---|---|---|---|

| ITEM NO | REF DES | DESCRIPTION | VARIAN PART NO. | MFG | MFG OR MS PART NO. | QTY/DASH NO -00 | -01 | -02 | -03 |
|---|---|---|---|---|---|---|---|---|---|
| 1 | | FAB., PCB | C112854-00 | | | 1 | | | |
| 2 | | | | | | | | | |
| 3 | | SCHEMATIC | C112852 | | | REF | | | |
| 4 | | | | | | | | | |
| 5 | | | | | | | | | |
| 6 | C1, C2 | CAPACITOR, ELECT., 1 μF, 150V | 41-506007 | SPRAGUE | 500D105F150BA7 | 2 | | | |
| 7 | C3 | CAPACITOR, CERAMIC, .0047 μF, 6KV | 41-299894 | SPRAGUE | 60GA-D47 | 1 | | | |
| 8 | C4 | CAPACITOR, CERAMIC, .01 μf, 200V | 41-229951 | | | 1 | | | |
| 9 | C5 | CAPACITOR, TANT., 3.6 μf, 125V | 41-609049 | | | 1 | | | |
| 10 | CR1,2 | DIODE, RECTIFIER | 66-304936 | | 1N4936 | 2 | | | |
| 11 | CR3 | DIODE, RECTIFIER | 66-304001 | | 1N4001 | 1 | | | |
| 12 | CR4 | DIODE, TRANSIENT SUPPRESSOR | 55-400025 | SEMTECH | L82A | 1 | | | |
| 13 | | | | | | | | | |
| 14 | E1,2,5,8,9 E11-20 | TERMINAL, TURRET | 16-229946 | USECO | 2011B-1 | 15 | | | |
| 15 | Q1, Q2 | TRANSISTOR, NPN | 62-920018 | MOTOROLA | MPS-A06 | 2 | | | |
| 16 | | | | | | | | | |
| 17 | | | | | | | | | |
| 18 | R1 | RESISTOR, VARIABLE, 100K | 36-792213 | BOURNS | 3006P-1-104 | 1 | | | |
| 19 | R2, R10 | RESISTOR, VARIABLE, 200K | 36-792306 | BOURNS | 3006P-1-204 | 2 | | | |
| 20 | | | | | | | | | |
| 21 | R4-R9 | RESISTOR, COMP., 1 MEG, 2W, 5% | 34-401710 | | RC42GF105J | 6 | | | |

varian | MICROWAVE EQUIPMENT OPERATIONS | TITLE: GRID ANODE ASSY | LM 112855 | REV E

CODE IDENT NO. 99313 | APPROVAL WALTER SMITH | DATE 3/21/77 | 3/21/77 | R-5

| APPLICATION | | | REVISION | | | | |
|---|---|---|---|---|---|---|---|
| NEXT ASSEMBLY | USED ON | EO | REV | DESCRIPTION | EO | DATE | APPROVED |
| D112822 | VZC-6961D6 | | A | INC E. | PS12130 | 9-7-77 | [illegible] |
| | | | B | INC E.O. | PS12406 | 9-20-78 | [illegible] |
| | | | C | INC E.O. | PS12466 | 9-20-78 | [illegible] |
| | | | D | INC E.O. | PS12591 | 9-20-78 | [illegible] |
| | | | E | INC E.O | PS12606 | 9-20-78 | [illegible] |

REVISION STATUS

| SHEET | | | | | | | | | | | | | | | | | | | | | | | | | | | | | |
|---|---|---|---|---|---|---|---|---|---|---|---|---|---|---|---|---|---|---|---|---|---|---|---|---|---|---|---|---|---|
| LTR | | | | | | | | | | | | | | | | | | | | | | | | | | | | | |
| SHEET | | | | | | | | | | | | | | | | | | | | | | | | | | | | | |
| LTR | | | | | | | | | | | | | | | | | | | | | | | | | | | | | |
| SHEET | | | | | | | | | | | | | | | | | | | | | | | | | | | | | |
| LTR | | | | | | | | | | | | | | | | | | | | | | | | | | | | | |

FORM 1758-01-375

| varian | MICROWAVE EQUIPMENT OPERATIONS | GRID ANODE ASSY | LM 112855 | REV E |
|---|---|---|---|---|

| ITEM NO | REF DES | DESCRIPTION | VARIAN PART NO. | MFG | MFG OR MS PART NO. | QTY/DASH NO. -00 | -01 | -02 | -03 |
|---|---|---|---|---|---|---|---|---|---|
| 22 | | | | | | | | | |
| 23 | R12 | RESISTOR, COMP., 1K, 1/4W, 5% | 32-301410 | | RC07GF102J | 1 | | | |
| 24 | R13 | RESISTOR, COMP., 51K, 1/4W, 5% | 32-301551 | | RC07GF513J | 1 | | | |
| 25 | R14 | RESISTOR, COMP., 100 OHM, 1/4W, 5% | 32-301310 | | RC07GF101J | 1 | | | |

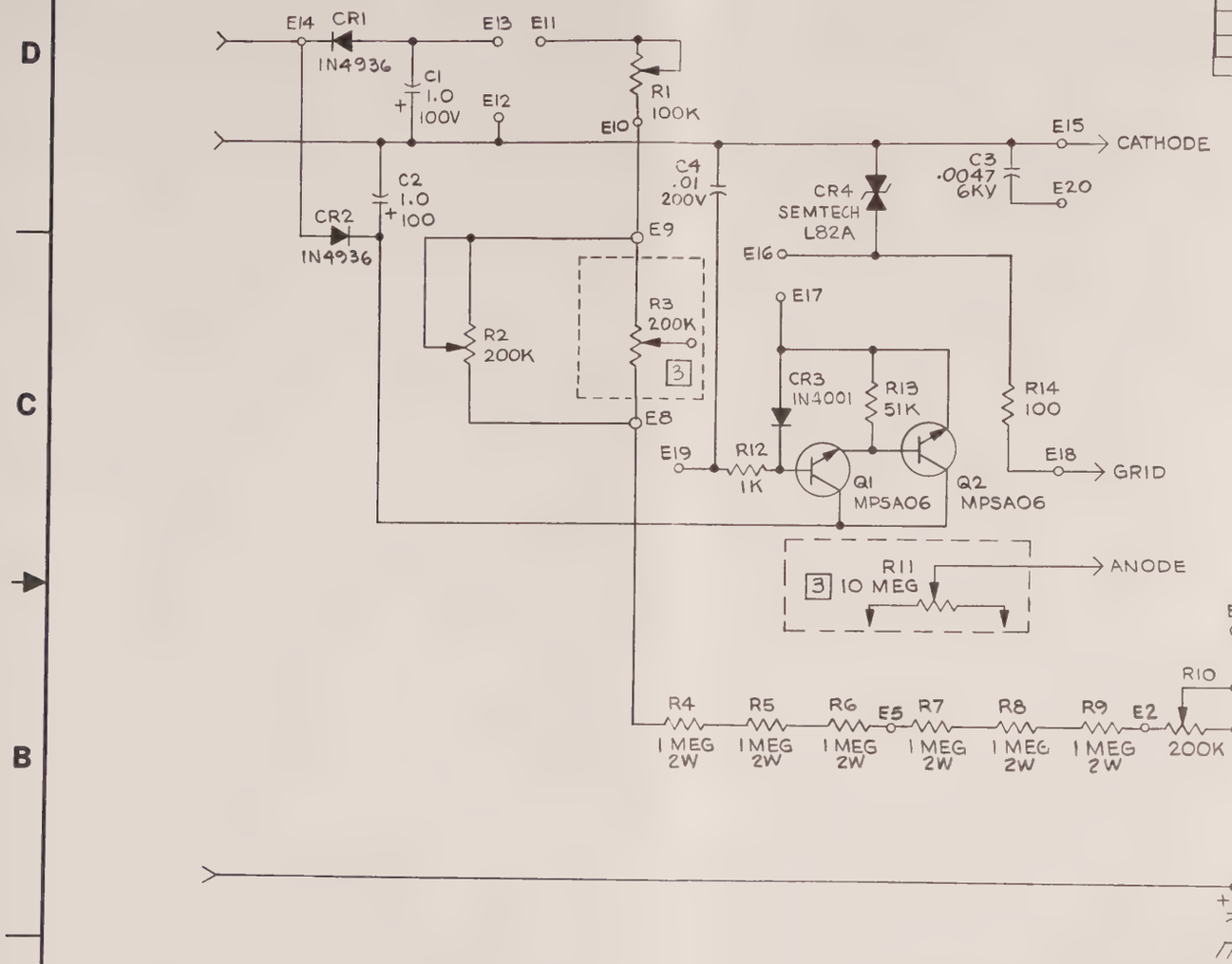


☐ MOUNTED OFF PCB ON BRACKET

2. ALL CAPACITORS ARE IN MICROFARADS.
1. ALL RESISTORS ARE IN OHMS, ¼W, COMP.
NOTES: UNLESS OTHERWISE SPECIFIED:

| REVISIONS | | | | | |
|---|---|---|---|---|---|
| ZONE | LTR | DESCRIPTION | EO | DATE | APPROVED |
| | A | INC E.O. | PS12134 | 9-6-77 | TE |
| | B | INC E.O. | PS12906 | 9-14-77 | TE |
| | C | INC E.O. | PS12591 | 9-14-78 | TE |
| | D | INC E.O | PS12606 | 9-14-78 | TE |

| QTY | IDENTIFYING NUMBER | DESCRIPTION | CODE IDENT | ITEM |
|---|---|---|---|---|
| LIST OF MATERIALS | | | | R-5 |

| | |
|---|---|
| C112855 | VZC-6961 D6 |
| NEXT ASSEMBLY | USED ON |
| APPLICATION | |

UNLESS OTHERWISE SPECIFIED DIMENSIONS ARE IN INCHES
DECIMALS: 1PL ± .1 2PL ± .02
3PL ± .005 FRAC ± 1/64
ANG ± 1° SURFACE FINISH ✓
MATERIAL
SPEC NO.
FINISH

CONTRACT NUMBER
DR Jillie Evans 10-19-76
CHK [illegible] 11-8-76
APPD [illegible] 3/21/77
APPD P.L. ADSWORTH 3/21/77
DESIGN ACTIVITY APPROVAL
CUSTOMER APPROVAL

varian
MICROWAVE EQUIPMENT OPERATIONS
SANTA CLARA, CALIFORNIA

GRID/ANODE SCHEMATIC

| SIZE | CODE IDENT NO. | |
|---|---|---|
| C | 99313 | 112852 D |
| SCALE | | SHEET 1 OF 1 |

SUPERSEDES

112852

3440-09-03 11/75 PRINTED IN U.S.A.

| REVISIONS | | | | | |
|---|---|---|---|---|---|
| ZONE | LTR | DESCRIPTION | EO | DATE | APPROVED |
| | A | INC. E.O. PS12069 & | PS11882 | 7-18-77 | TE/JHT |
| | B | REVISED PER E.O. | PS12355 | 3/22/78 | [illegible] |
| | C | INC E.O. | PS12720 | 9-14-78 | TE/[illegible] |

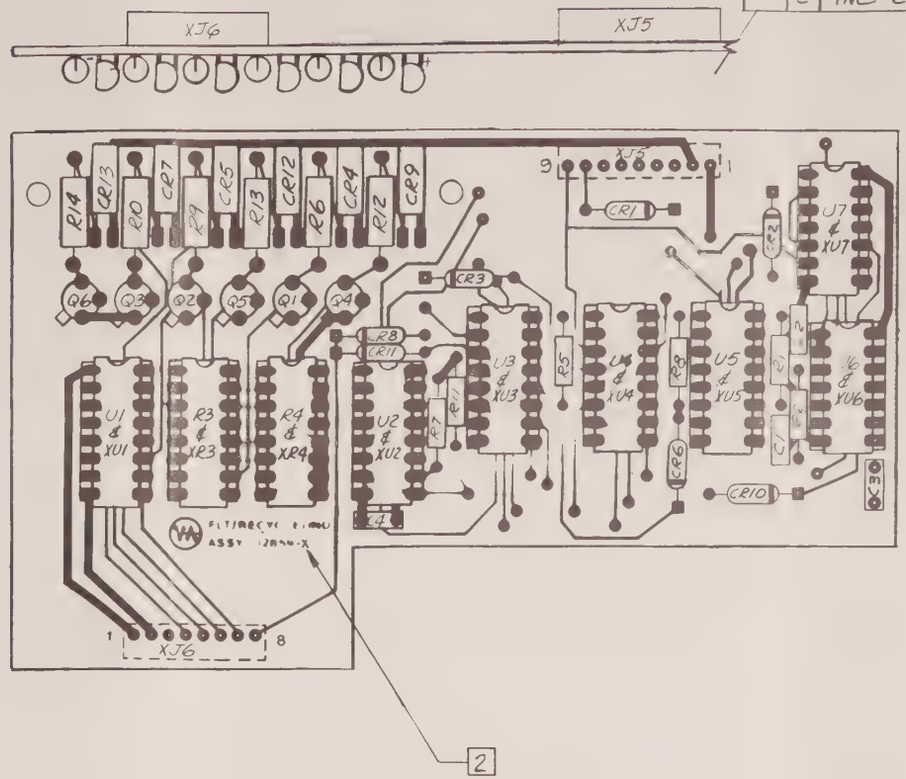


SEE SEPARATE LIST OF MATERIALS - LM112859

| QTY | IDENTIFYING NUMBER | DESCRIPTION | CODE IDENT | ITEM |
|---|---|---|---|---|
| | | LIST OF MATERIALS | PS11732 | |

2. MARK CURRENT REVISION LETTER OF ASSY.

1. ASSEMBLE/VARIAN WORKMANSHIP STD. 87-800-192.

NOTES:

| | |
|---|---|
| E112850 | VEC-6961D6 |
| NEXT ASSEMBLY | USED ON |
| APPLICATION | |

UNLESS OTHERWISE SPECIFIED DIMENSIONS ARE IN INCHES

DECIMALS: 1PL ± .1 2PL ± .02

3PL ± .005 FRAC ± 1/64

ANG ± 1° SURFACE FINISH ✓

MATERIAL

SPEC NO.

FINISH

CONTRACT NUMBER

| | | |
|---|---|---|
| DR | [illegible] | 5/26/76 |
| CHK | | |
| APPD | [illegible] | 1/21/77 |
| APPD | W.I. Berg | 1/21/77 |

DESIGN ACTIVITY APPROVAL

CUSTOMER APPROVAL

varian

MICROWAVE EQUIPMENT OPERATIONS
SANTA CLARA, CALIFORNIA

ASSEMBLY
FLT/RECYCLE/IND PWB

| SIZE | CODE IDENT NO. | | |
|---|---|---|---|
| C | 99313 | 112859 | C |

SCALE 2X SHEET 1 OF 1

SUPERSEDES

3440-09-03 11/72 PRINTED IN U.S.A.

112859

| varian | MICROWAVE EQUIPMENT OPERATIONS | TITLE: ASSEMBLY, FLT/RECYCLE/IND PWB | LM 112859 | REV C |
|---|---|---|---|---|
| CODE IDENT NO. 99313 | APPROVAL [illegible] DATE 1/21/77 | | | |

| APPLICATION | | | REVISION | | | | |
|---|---|---|---|---|---|---|---|
| NEXT ASSEMBLY | USED ON | EO | REV | DESCRIPTION | EO | DATE | APPROVED |
| | | PS1178- | A | INC E.O.S | PS 11882<br>PS 12069 | 7-19-77 | [illegible] |
| | | | B | REVISED PER EO | PS12355 | 3/28/78 | [illegible] |
| | | | C | INC E.O. | PS12720 | 9-14-78 | [illegible] |

REVISION STATUS

| | | | | | | | | | | | | | | | | | | | | | | | | | | | | |
|---|---|---|---|---|---|---|---|---|---|---|---|---|---|---|---|---|---|---|---|---|---|---|---|---|---|---|---|---|
| SHEET | | | | | | | | | | | | | | | | | | | | | | | | | | | | |
| LTR | | | | | | | | | | | | | | | | | | | | | | | | | | | | |
| SHEET | | | | | | | | | | | | | | | | | | | | | | | | | | | | |
| LTR | | | | | | | | | | | | | | | | | | | | | | | | | | | | |
| SHEET | | | | | | | | | | | | | | | | | | | | | | | | | | | | |
| LTR | | | | | | | | | | | | | | | | | | | | | | | | | | | | |

| varian | MICROWAVE EQUIPMENT OPERATIONS | ASSEMBLY, FLT/RECYCLE/IND PWB | LM 112859 | REV C |
|---|---|---|---|---|

| ITEM NO | REF DES | DESCRIPTION | VARIAN PART NO. | MFG | MFG OR MS PART NO. | QTY/DASH NO. -00 | -01 | -02 | -03 |
|---|---|---|---|---|---|---|---|---|---|
| 1 | | FABRICATION PWB | C112858 | | | 1 | | | |
| 2 | | | | | | | | | |
| 3 | | | | | | | | | |
| 4 | C1-C4 | CAPACITOR, CERAMIC, .01 uf, 200V | 41-229951 | | CK06BX103K | 4 | | | |
| 5 | | | | | | | | | |
| 6 | CR1-CR3, CR6, CR8, CR10, CR11 | DIODE, SIGNAL | 66-320914 | | 1N914B | 7 | | | |
| 7 | CR4, 5, 7, 9, CR12, 13 | DIODE, LED | 67-499845 | MONSANTO | MV5753 | 6 | | | |
| 8 | | | | | | | | | |
| 9 | Q1-Q6 | TRANSISTOR, NPN | 62-912222 | | 2N2222A | 6 | | | |
| 10 | | | | | | | | | |
| 11 | R1, R5, R7, R8, R11 | RESISTOR, COMP. 100K, 1/4W, 5% | 32-301610 | | RC07GF104J | 5 | | | |
| 12 | R2 | RESISTOR, COMP. 2.7M 1/4W, 5% | 32-301727 | (D.I.T.) | | 1 | | | |
| 13 | R6, R9, R10, R12-R14 | RESISTOR, COMP. 620 OHM, 1/2W, 5% | 32-201362 | | RC20GF621J | 6 | | | |
| 14 | R3 | RESISTOR, NETWORK, 3.3K | 31-400036 | ALLEN-BRADLEY | 316B332 | 1 | | | |
| 15 | R4 | RESISTOR, NETWORK, 1K | 31-400016 | ALLEN-BRADLEY | 316B102 | 1 | | | |
| 16 | | | | | | | | | |
| 17 | | | | | | | | | |
| 18 | U1, U3 | I.C.-HEX BUFFER/INVERTER | 62-600032 | RCA | CD4049AE | 2 | | | |
| 19 | U2 | I.C.-DUAL BINARY UP-counter | 62-600691 | RCA | CD4520BE | 1 | | | |
| 20 | U4 | I.C.-QUAD 3 STATE R/S LATCHES | 62-600684 | RCA | CD4044AE | 1 | | | |

| varian | MICROWAVE EQUIPMENT OPERATIONS | ASSEMBLY, FLT/RECYCLE/IND PWB | LM 112859 | REV C |
|---|---|---|---|---|

| ITEM NO | REF DES | DESCRIPTION | VARIAN PART NO. | MFG | MFG OR MS PART NO. | QTY/DASH NO. | | | |
|---|---|---|---|---|---|---|---|---|---|
| | | | | | | -00 | -01 | -02 | -03 |
| 21 | U5 | I.C.-14 STAGE CNTR/DIVIDER/OSC | 62-600692 | RCA | CD4060AE | 1 | | | |
| 22 | U6 | I.C.-QUAD 2 INPUT NAND | 62-600687 | RCA | CD4093BE | 1 | | | |
| 23 | U7 | I.C.-QUAD 2 INPUT NAND | 62-600006 | RCA | CD4011AE | 1 | | | |
| 24 | | | | | | | | | |
| 25 | | | | | | | | | |
| 26 | XU1-XU5 XR3,XR4 | SOCKET I.C. - 16 PIN | 54-634008 | SAE | CSA3100-16B | 7 | | | |
| 27 | XU6,XU7 | SOCKET I.C. - 14 PIN | 54-634007 | SAE | CSA3100-14B | 2 | | | |
| 28 | XJ5 | CONNECTOR, 9 CIRCUITS | 51-407121 | MOLEX | 22-02-2091 | 1 | | | |
| 29 | XJ6 | CONNECTOR, 8 CIRCUITS | 51-407120 | MOLEX | 22-02-2081 | 1 | | | |

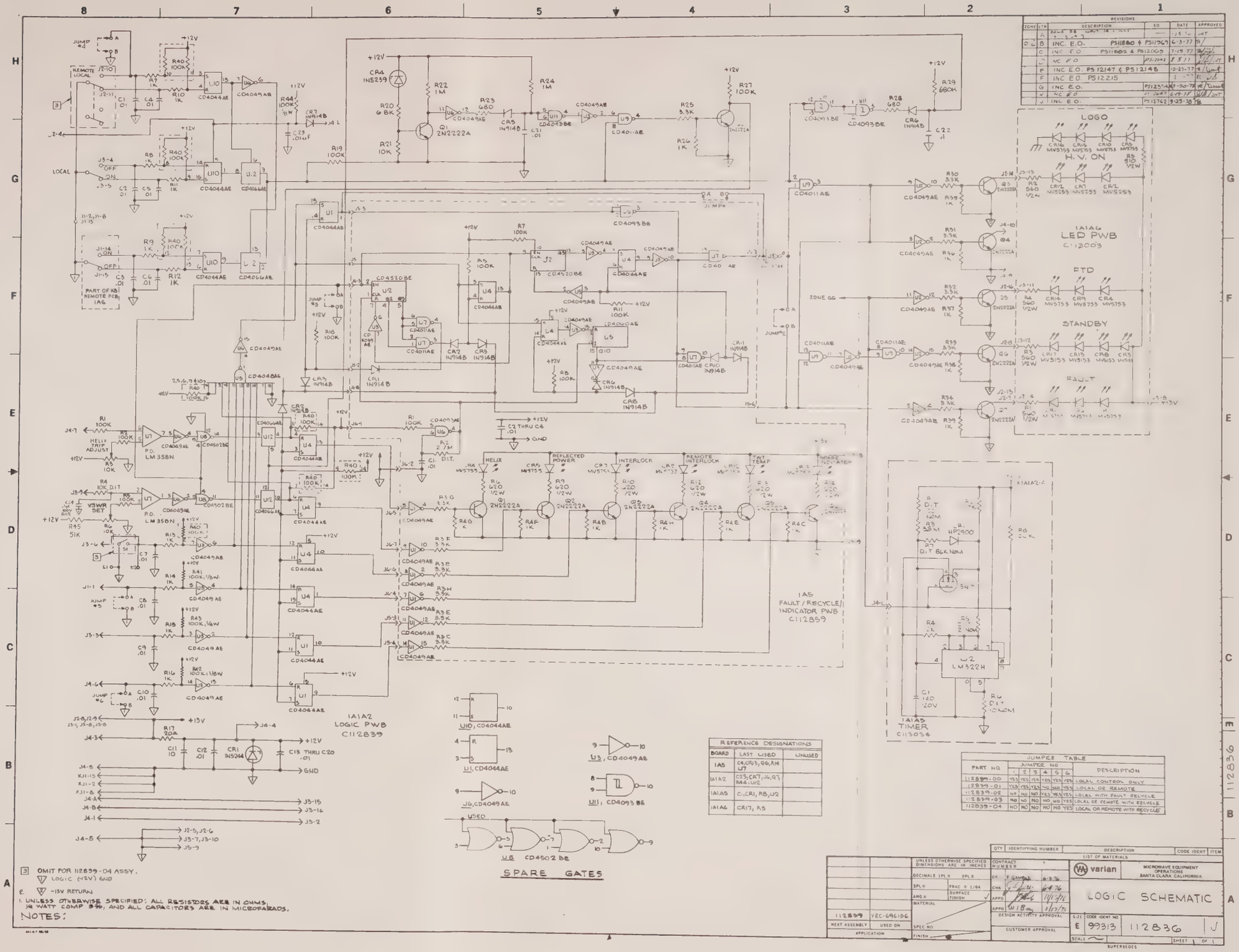


| REVISIONS | | | | | |
|---|---|---|---|---|---|
| ZONE | LTR | DESCRIPTION | EO | DATE | APPROVED |
| | A | [illegible] | — | [illegible] | [illegible] |
| D | B | INC. E.O. PS11880 & PS11969 | | 6-3-77 | [illegible] |
| | C | INC E.O. PS11882 & PS12069 | | 7-19-77 | [illegible] |
| | D | INC E.O. | PS12042 | 8-5-77 | [illegible] |
| | E | INC E.O. PS12147 & PS12148 | | 10-27-77 | [illegible] |
| | F | INC E.O. PS12215 | | [illegible] | [illegible] |
| | G | INC E.O. | PS12354 | 3-30-78 | [illegible] |
| | H | INC E.O. | [illegible] | 6-19-78 | [illegible] |
| | J | INC E.O. | PS12762 | 9-25-78 | [illegible] |

| REFERENCE DESIGNATIONS | | |
|---|---|---|
| BOARD | LAST USED | UNUSED |
| 1A5 | C4, CR13, Q6, R14, U7 | |
| 1A1A2 | C23, CR7, J6, Q3, R44, U12 | |
| 1A1A5 | C1, CR1, R8, U2 | |
| 1A1A6 | CR17, R5 | |

| JUMPER TABLE | | | | | | | |
|---|---|---|---|---|---|---|---|
| PART NO | JUMPER NO 1 | 2 | 3 | 4 | 5 | 6 | DESCRIPTION |
| 112839-00 | YES | YES | YES | YES | YES | YES | LOCAL CONTROL ONLY |
| 112839-01 | YES | YES | YES | NO | NO | YES | LOCAL OR REMOTE |
| 112839-02 | NO | NO | NO | YES | YES | YES | LOCAL WITH FAULT RECYCLE |
| 112839-03 | NO | NO | NO | NO | NO | YES | LOCAL OR REMOTE WITH RECYCLE |
| 112839-04 | NO | NO | NO | NO | NO | YES | LOCAL OR REMOTE WITH RECYCLE |

3 OMIT FOR 112839-04 ASSY.
▽ LOGIC (+12V) GND
2. ▽ -13V RETURN
1. UNLESS OTHERWISE SPECIFIED: ALL RESISTORS ARE IN OHMS, 1/4 WATT COMP 5%, AND ALL CAPACITORS ARE IN MICROFARADS.
NOTES:

| QTY | IDENTIFYING NUMBER | DESCRIPTION | CODE IDENT | ITEM |
|---|---|---|---|---|

LIST OF MATERIALS

UNLESS OTHERWISE SPECIFIED DIMENSIONS ARE IN INCHES
DECIMALS 1PL ± 2PL ±
3PL ± FRAC ± 1/64
ANG ± SURFACE FINISH
MATERIAL
SPEC NO
FINISH

| NEXT ASSEMBLY | USED ON |
|---|---|
| 112839 | VZC-696ID6 |

APPLICATION

CONTRACT NUMBER
DR F. GAMBLE 6-3-76
CHK [illegible] 6-4-76
APPD [illegible] 11/17/76
APPD W. I. B[illegible] 8/17/76
DESIGN ACTIVITY APPROVAL
CUSTOMER APPROVAL

varian
MICROWAVE EQUIPMENT OPERATIONS
SANTA CLARA CALIFORNIA

LOGIC SCHEMATIC

SIZE E | CODE IDENT NO 99313 | 112836 | J
SCALE ~ | SHEET 1 OF 1
SUPERSEDES

| REVISIONS | | | | | |
|---|---|---|---|---|---|
| ZONE | LTR | DESCRIPTION | EO | DATE | APPROVED |
| | A | REVISED PER ARTWORK CHG'S | — | 7-20-76 | JHT |
| | B | REVISED | — | 11/2/76 | JHT |
| | C | ADDED -01 | PS11819 | 4/12/77 | J.A. |
| | D | INC. E.O. PS11949 & PS11953 | | 7-11-77 | |
| | E | ADDED-02 & -03 | PS12155 | 9-7-77 | |
| | F | INC. E.O. PS12241 | | 11/18/77 | FG |

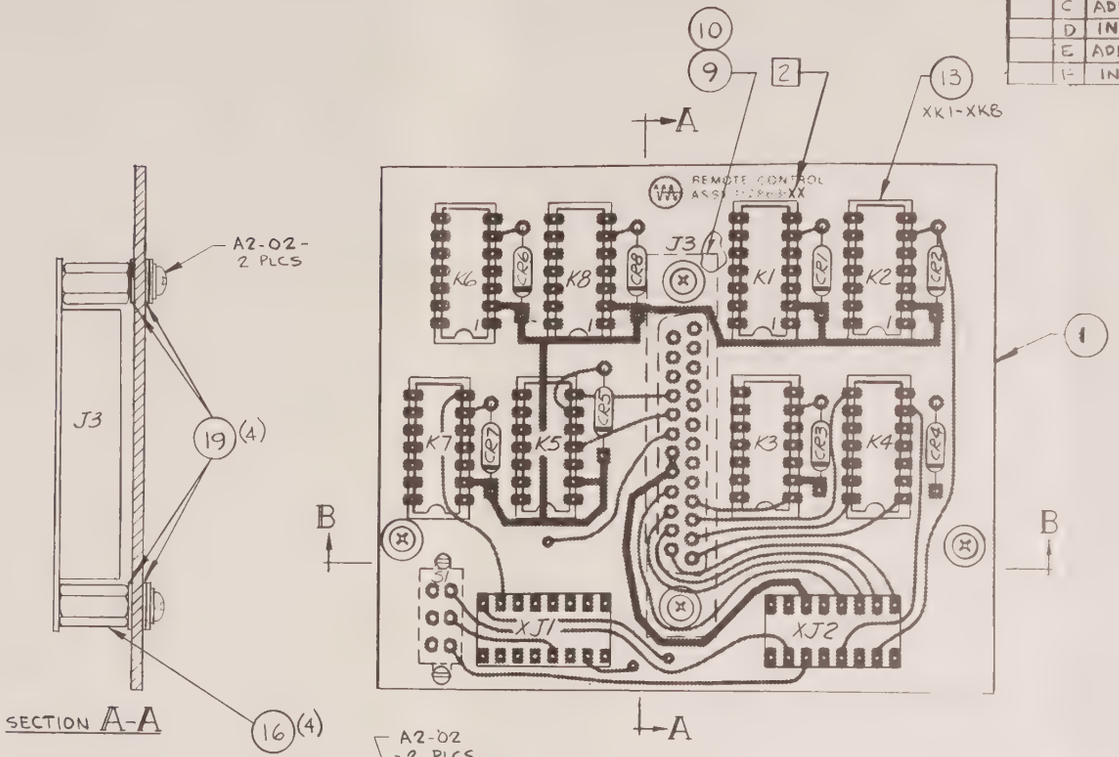


-00 ASSY

SEE SEPARATE LIST OF MATERIALS LM 112863

| QTY | IDENTIFYING NUMBER | DESCRIPTION | CODE IDENT | ITEM |
|---|---|---|---|---|
| LIST OF MATERIALS | | | | |

| | | | |
|---|---|---|---|
| -02 | D113860 | | |
| -01 | D113860 | | |
| -00 | E112850 | VZC-6961D6 | |
| DASH NO. | NEXT ASSEMBLY | USED ON | |
| APPLICATION | | | |

UNLESS OTHERWISE SPECIFIED DIMENSIONS ARE IN INCHES
DECIMALS 1PL ± 1 2PL ± 02
3PL ± 005 FRAC ± 1 64
ANG ± 1 SURFACE FINISH ✓
MATERIAL
SPEC NO
FINISH

CONTRACT NUMBER

| | | |
|---|---|---|
| DR | F GAMBLE | 5/5/76 |
| CHK | | 6-8-76 |
| APPD | | 11/15/76 |
| APPD | W I Berg | 7/29/75 |
| DESIGN ACTIVITY APPROVAL | | |
| CUSTOMER APPROVAL | | |

varian — MICROWAVE EQUIPMENT OPERATIONS, SANTA CLARA, CALIFORNIA

ASSEMBLY
REMOTE CONTROL PWB

| SIZE | CODE IDENT NO | |
|---|---|---|
| C | 99313 | 112863 F |

SCALE 2X — SHEET 1 OF 2

SUPERSEDES

3. ASSEMBLE USING HARDWARE/DWG 110625.
2. MARK CURRENT REVISION LETTER OF ASSY
1. ASSEMBLE/VARIAN WORKMANSHIP STD. 87-800-192
NOTES:

3440-09-03 11/72 PRINTED IN U.S.A.

112863 D

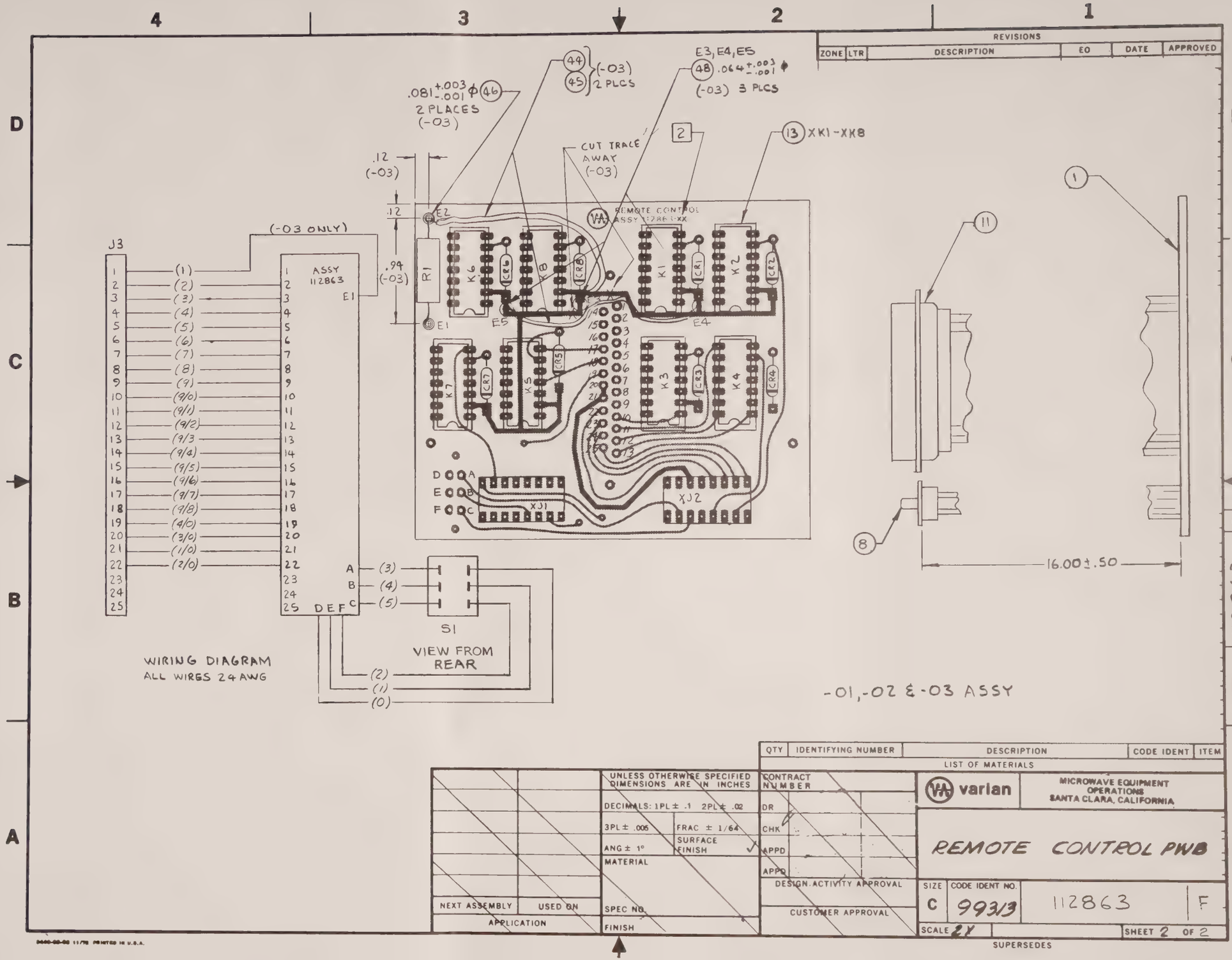

REVISIONS
ZONE LTR DESCRIPTION EO DATE APPROVED
.081 +.003 -.001 ϕ (46) 2 PLACES (-03)
(44) (45) (-03) 2 PLCS
E3, E4, E5 (48) .064 +.003 -.001 ϕ (-03) 3 PLCS
CUT TRACE AWAY (-03)
(13) XK1-XK8
.12 (-03)
.12
.94 (-03)
(-03 ONLY)
J3
ASSY 112863
E1
E2
E4
E5
R1
K1
K2
K3
K4
K5
K6
K7
K8
CR1
CR2
CR3
CR4
CR5
CR6
CR7
CR8
XJ1
XJ2
S1
VIEW FROM REAR
WIRING DIAGRAM
ALL WIRES 24 AWG
16.00 ± .50
-01, -02 & -03 ASSY
112863
QTY IDENTIFYING NUMBER DESCRIPTION CODE IDENT ITEM
LIST OF MATERIALS
UNLESS OTHERWISE SPECIFIED DIMENSIONS ARE IN INCHES
DECIMALS: 1PL ± .1 2PL ± .02
3PL ± .005 FRAC ± 1/64
ANG ± 1° SURFACE FINISH
MATERIAL
SPEC NO.
FINISH
NEXT ASSEMBLY USED ON
APPLICATION
CONTRACT NUMBER
DR
CHK
APPD
APPD
DESIGN ACTIVITY APPROVAL
CUSTOMER APPROVAL
varian
MICROWAVE EQUIPMENT OPERATIONS SANTA CLARA, CALIFORNIA
REMOTE CONTROL PWB
SIZE C
CODE IDENT NO. 99313
112863
F
SCALE 2X
SHEET 2 OF 2
SUPERSEDES

| varian | MICROWAVE EQUIPMENT OPERATIONS | REMOTE CONTROL PWB ASSY | LM 112863 | REV F |
|---|---|---|---|---|

| ITEM NO | REF DES | DESCRIPTION | VARIAN PART NO. | MFG | MFG OR MS PART NO. | QTY DASH NO. | | | |
|---|---|---|---|---|---|---|---|---|---|
| | | | | | | -00 | -01 | -02 | -03 |
| 43 | | SCHEMATIC | C129442 | | | - | - | - | ref |
| 44 | | WIRE, BARE, TINNED, 24 AWG | 81-099924 | | | - | - | - | AR |
| 45 | | TUBING, INSULATING | 88-494807 | | | - | - | - | AR |
| 46 | E1, E2 | TERMINAL | 16-229801 | USECO | 1390B-1 | - | - | - | 2 |
| 47 | R1 | RESISTOR, C.C., 330 OHM, 1W, $\pm$ 5% | 33-301333 | | | - | - | - | 1 |
| 48 | E3-E5 | TERMINAL | 16-219952 | USECO | 2030B-1 | - | - | - | 3 |

varian | MICROWAVE EQUIPMENT OPERATIONS | REMOTE CONTROL PWB ASSY | LM 112863 | REV F

| ITEM NO | REF DES | DESCRIPTION | VARIAN PART NO. | MFG | MFG OR MS PART NO. | QTY/DASH NO. -00 | -01 | -02 | -03 |
|---|---|---|---|---|---|---|---|---|---|
| 22 | | WIRE, TEF. INSUL., EE, 24 AWG, RED | 81-288722 | | | – | AR | AR | AR |
| 23 | | WIRE, TEF. INSUL., EE, 24 AWG, ORN | 81-288723 | | | – | AR | AR | AR |
| 24 | | WIRE, TEF. INSUL., EE, 24 AWG, YEL | 81-288744 | | | – | AR | AR | AR |
| 25 | | WIRE, TEF. INSUL., EE, 24 AWG, GRN | 81-288755 | | | – | AR | AR | AR |
| 26 | | WIRE, TEF. INSUL., EE, 24 AWG, BLU | 81-288766 | | | – | AR | AR | AR |
| 27 | | WIRE, TEF. INSUL., EE, 24 AWG, VIO | 81-288777 | | | – | AR | AR | AR |
| 28 | | WIRE, TEF. INSUL., EE, 24 AWG, WHT | 81-288799 | | | – | AR | AR | AR |
| 29 | | WIRE, TEF., INSUL., EE, 24 AWG. W/BLK | 81-288775 | | | – | AR | AR | AR |
| 30 | | WIRE, TEF., INSUL., EE, 24 AWG. W/BRN | 81-288791 | | | – | AR | AR | AR |
| 31 | | WIRE, TEF., INSUL., EE, 24 AWG. W/RED | 81-288792 | | | – | AR | AR | AR |
| 32 | | WIRE, TEF., INSUL., EE, 24 AWG. W/ORN | 81-288793 | | | – | AR | AR | AR |
| 33 | | WIRE, TEF., INSUL., EE, 24 AWG. W/YEL | 81-288794 | | | – | AR | AR | AR |
| 34 | | WIRE, TEF. INSUL., EE, 24 AWG. W/GRN | 81-288795 | | | – | AR | AR | AR |
| 35 | | WIRE, TEF., INSUL., EE, 24 AWG. W/BLU | 81-288796 | | | – | AR | AR | AR |
| 36 | | WIRE, TEF., INSUL., EE, 24 AWG, W/VIO | 81-288797 | | | – | AR | AR | AR |
| 37 | | WIRE, TEF., INSUL., EE, 24 AWG, W/GRY | 81-288798 | | | – | AR | AR | AR |
| 38 | | WIRE, TEF., INSUL., EE, 24 AWG, YEL/BLK | 81-288740 | | | – | AR | AR | AR |
| 39 | | WIRE, TEF., INSUL., EE, 24 AWG, ORN/BLK | 81-288730 | | | – | AR | AR | AR |
| 40 | | WIRE, TEF., INSUL., EE, 24 AWG, BRN/BLK | 81-288710 | | | – | AR | AR | AR |
| 41 | | WIRE, TEF., INSUL., EE, 24 AWG, RED/BLK | 81-288720 | | | – | AR | AR | AR |
| 42 | | WIRE, TEF., INSUL., EE, 24 AWG, BRN | 81-288711 | | | – | AR | AR | AR |

| varian | MICROWAVE EQUIPMENT OPERATIONS | REMOTE CONTROL PWB ASSY | LM 112863 | REV F |
|---|---|---|---|---|

| ITEM NO | REF DES | DESCRIPTION | VARIAN PART NO. | MFG | MFG OR MS PART NO. | QTY/DASH NO. -00 | -01 | -02 | -03 |
|---|---|---|---|---|---|---|---|---|---|
| 1 | | FAB., REMOTE CONTROL | C112862 | | | 1 | 1 | 1 | 1 |
| 2 | | | | | | | | | |
| 3 | CR1-8 | DIODE, 1N914B | 66-320914 * | | | 8 | 8 | 8 | 8 |
| 4 | | | | | | | | | |
| 5 | K1-8 | RELAY 12V SPDT | 72-920425 * | MAGNECRAFT | W118D1P-3 | 8 | 8 | 8 | 8 |
| 6 | | SCHEMATIC | C113903-01 | | | - | - | ref | - |
| 7 | S1 | SWITCH, SLIDE - DPDT | 71-349928 | CHICAGO SWITCH | 43-200223 | 1 | - | - | - |
| 8 | S1 | SWITCH, SLIDE | 71-349992 | CHICAGO SWITCH | 43-200-126 | - | 1 | 1 | 1 |
| 9 | J3 | CONNECTOR | 51-308757 | CANNON ITT | DBC25S-F0 | 1 | - | - | - |
| 10 | | CONTACT, SOCKET | 51-910176 | CANNON | 030-1990-000 | 25 | - | - | - |
| 11 | J3 | CONNECTOR | 51-308745 | CANNON | DBC-25S | - | 1 | 1 | 1 |
| 12 | | WIRE, 24 AWG, EE, GRAY | 81-288788 | | | - | AR | AR | AR |
| 13 | XK1-8 | SOCKET, RELAY | 54-634007 | SAE | CSA3100-14B | 8 | 8 | 8 | 8 |
| 14 | XJ1,XJ2 | SOCKET | 54-634008 | SAE | CSA3100-16B | 2 | 2 | 2 | 2 |
| 15 | | WIRE, TEF.INSUL., EE, 24 AWG, BLK | 81-288700 | | | - | AR | AR | AR |
| 16 | | STANDOFF, #4-40 x 3/8 | 22-429901 | AMATOM | 8104-B-0440-3A | 4 | - | - | - |
| 17 | | SCHEMATIC | C113903-00 | | | - | ref | - | - |
| 18 | | SCHEMATIC | C112860 | | | ref | - | - | - |
| 19 | | WASHER, NYLON #4 | 14-999702 | | | 4 | - | - | - |
| 20 | | RELAY, 12V WITH CLAMPING DIODE | 72-920426 * | MAY BE SUB. FOR ITEMS 3 & 5 | MAGNECRAFT W118D1P-7 | 8 | 8 | 8 | 8 |
| 21 | | FLAT WASHER, #4 | 14-122004 | | | 4 | - | - | - |

| varian | MICROWAVE EQUIPMENT OPERATIONS | TITLE: REMOTE CONTROL PWB ASSY | LM 112863 | REV F |
|---|---|---|---|---|
| CODE IDENT NO. 99313 | APPROVAL W I B-y DATE 7 [illegible] | [illegible] 11/1/76 | | |

| APPLICATION | | | REVISION | | | | |
|---|---|---|---|---|---|---|---|
| NEXT ASSEMBLY | USED ON | EO | REV | DESCRIPTION | EO | DATE | APPROVED |
| | | | A | REVISED | | 7/20/76 | |
| | | | B | REVISED | | 10/8/76 | [illegible] |
| | | | C | ADDED -01 | PS11819 | 4/11/77 | L A. |
| | | | D | INC E.Os | PS 11949 PS 11953 | 7/12/77 | [illegible] |
| | | | E | ADDED -02 & -03 | PS12155 | 9/7/77 | L a. |
| | | | F | INC E.O. | PS12241 | 11/18/77 | [illegible] |

REVISION STATUS

| | | | | | | | | | | | | | | | | | | | | | | | | | | |
|---|---|---|---|---|---|---|---|---|---|---|---|---|---|---|---|---|---|---|---|---|---|---|---|---|---|---|
| SHEET | | | | | | | | | | | | | | | | | | | | | | | | | | |
| LTR | | | | | | | | | | | | | | | | | | | | | | | | | | |
| SHEET | | | | | | | | | | | | | | | | | | | | | | | | | | |
| LTR | | | | | | | | | | | | | | | | | | | | | | | | | | |
| SHEET | | | | | | | | | | | | | | | | | | | | | | | | | | |
| LTR | | | | | | | | | | | | | | | | | | | | | | | | | | |

FORM 1758-01-375

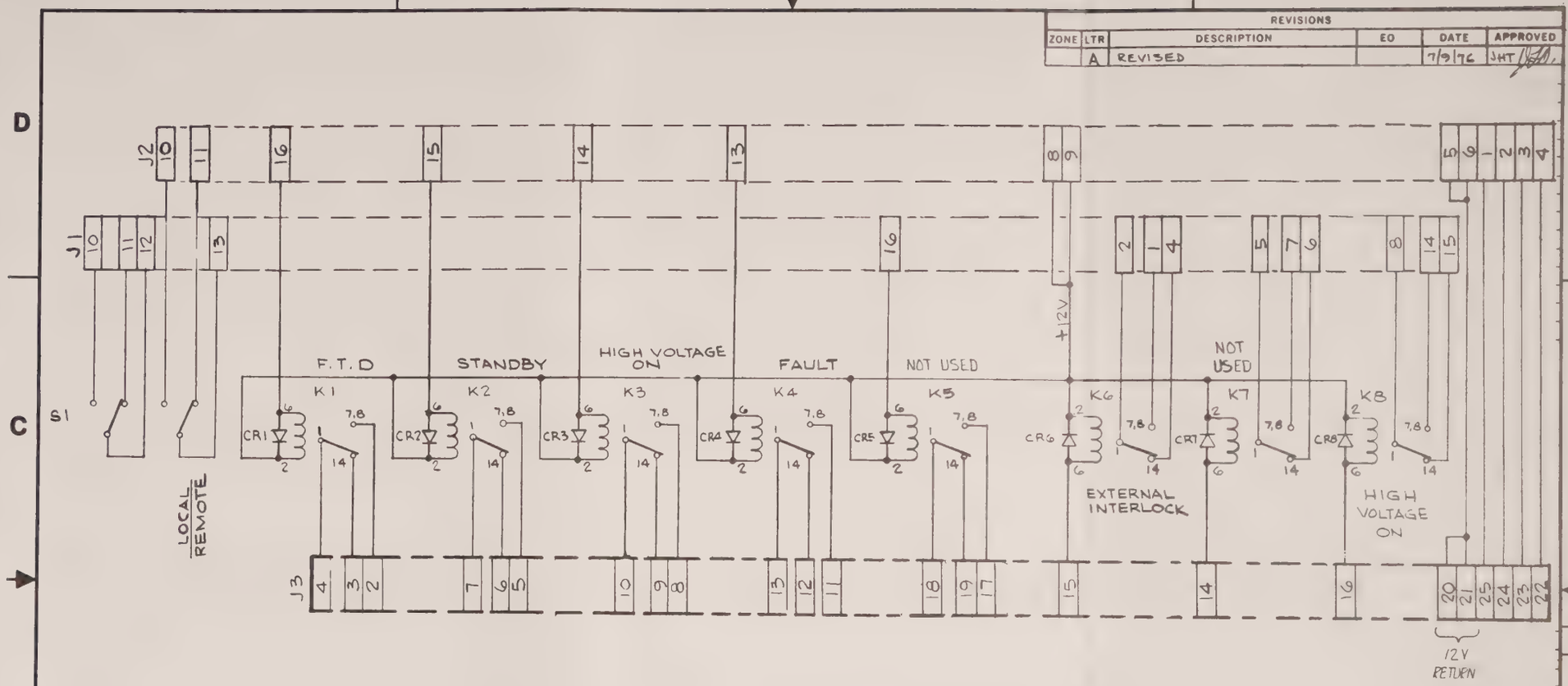


| REVISIONS | | | | | |
|---|---|---|---|---|---|
| ZONE | LTR | DESCRIPTION | EO | DATE | APPROVED |
| | A | REVISED | | 7/9/76 | JHT |

| QTY | IDENTIFYING NUMBER | DESCRIPTION | CODE IDENT | ITEM |
|---|---|---|---|---|

LIST OF MATERIALS

| | |
|---|---|
| C112863 | VEC-696106 |
| NEXT ASSEMBLY | USED ON |
| APPLICATION | |

UNLESS OTHERWISE SPECIFIED DIMENSIONS ARE IN INCHES
DECIMALS: 1PL ± .1 2PL ± .02
3PL ± .005 FRAC ± 1/64
ANG ± 1° SURFACE FINISH ✓
MATERIAL
SPEC NO
FINISH

CONTRACT NUMBER

| | | |
|---|---|---|
| DR | F. GAMBLE | 4/14/76 |
| CHK | | 7-27-76 |
| APPD | | |
| APPD | W I Berg | 7/29/76 |

DESIGN ACTIVITY APPROVAL
CUSTOMER APPROVAL

varian
MICROWAVE EQUIPMENT OPERATIONS
SANTA CLARA, CALIFORNIA

SCHEMATIC
REMOTE CONTROL
PWB

| SIZE | CODE IDENT NO | | |
|---|---|---|---|
| C | 99313 | 112860 | A |

SCALE ~ SHEET 1 OF 1

SUPERSEDES

112860

3460-09-03 11/75 PRINTED IN U.S.A.

# SECTION 8

# SPECIAL FEATURES

## 8.0 INTRODUCTION

This section will describe the special features that are optionally incorporated into the TWTA. Each of the special features will be described and its own schematic and material list will be included.

## REMOTE CONTROL - OPTION

The remote control interface point for the TWTA is through connection J1 on the rear panel. The interface consists of the relays shown on the referenced schematic above. Status and control information is provided at the remote interface.

Status information consists of a Form C contact transfer to indicate FTD, STDBY, HV ON and Fault. An open from (Pin 20), applied to the external interlock input (Pin 15), will shut off the TWTA and register as a fault. This is a control input. Another control input is the HV on/off control. HV is turned on, when S1 is in the remote position, by applying a ground (Pin 20) to Pin 16 the control input. HV is turned off by removing this ground. This also resets any fault.

MP MASTER
MA24442